Service Manual

74SR590/01B/02B

Audio/Video receiver

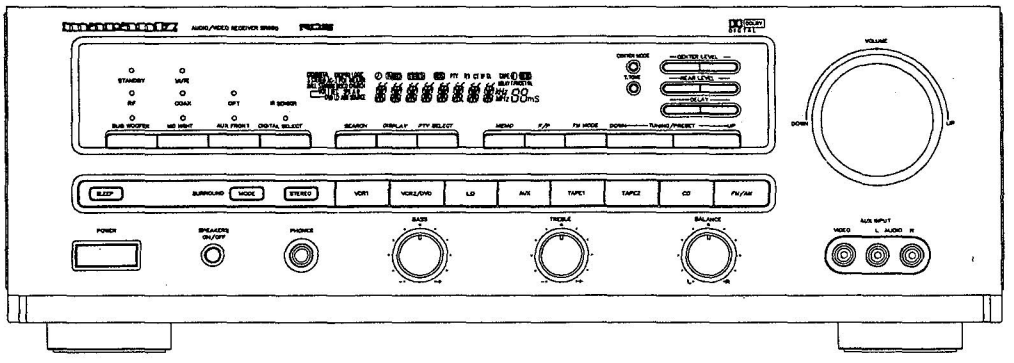

TABLE OF CONTENTS

1. TECHNICAL SPECIFICATIONS 1
2. WIRING DIAGRAM 2
3. BLOCK DIAGRAM 3
4. SCHEMATIC DIAGRAM AND PARTS LOCATIONS 5
5. COMPONENT DESCRIPTION 23
6. ADJUSTMENT PROCEDURE 25
7. EXPLODED VIEW AND PARTS LIST 27
8. ELECTRICAL PARTS LIST 30

Please use this service manual with referring to the user guide (D.F.U) without fail.

marantz®

model SR590

Printed in Japan

MARANTZ DESIGN AND SERVICE

Using superior design and selected high grade components, **MARANTZ** company has created the ultimate in stereo sound. Only original **MARANTZ** parts can insure that your **MARANTZ** product will continue to perform to the specifications for which it is famous.

Parts for your **MARANTZ** equipment are generally available to our National Marantz Subsidiary or Agent.

ORDERING PARTS :

Parts can be ordered either by mail or by Fax.. In both cases, the correct part number has to be specified.

The following information must be supplied to eliminate delays in processing your order :

1. Complete address
2. Complete part numbers and quantities required
3. Description of parts
4. Model number for which part is required
5. Way of shipment
6. Signature : any order form or Fax. must be signed, otherwise such part order will be considered as null and void.

USA
MARANTZ AMERICA, INC.
440 MEDINAH ROAD
ROSELLE, ILLINOIS 60172
USA
PHONE : 630 - 307 - 3100
FAX : 630 - 307 - 2687

EUROPE / TRADING
MARANTZ EUROPE B.V.
P.O.BOX 80002, BUILDING SFF2
5600 JB EINDHOVEN
THE NETHERLANDS
PHONE : +31 - 40 - 2732241
FAX : +31 - 40 - 2735578

BRAZIL
MARANTZ BRAZIL
CAIXA POSTAL 21462
CEP 04698-970
SAO PAULO, SP, BRAZIL
PHONE : 0800 - 123123(Discagem Direta Gratuita)
FAX : +55 11 534. 8988

***PROFESSIONAL* AMERICAS**
SUPERSCOPE TECHNOLOGIES, INC.
MARANTZ PROFESSIONAL PRODUCTS
2640 WHITE OAK CIRCLE, SUITE A
AURORA, ILLINOIS 60504 USA
PHONE : 630 - 820 - 4800
FAX : 630 - 820 - 8103

CANADA
LENBROOK INDUSTRIES LIMITED
633 GRANITE COURT,
PICKERING, ONTARIO L1W 3K1
CANADA
PHONE : 905 - 831 - 6333
FAX : 905 - 831 - 6936

AUSTRALIA
SCAN AUDIO PTY. LTD.
52 CROWN STREET, RICHMOND 3121
VICTORIA
AUSTRALIA
PHONE : +61 - 3 - 9429 - 2199
FAX : +61 - 3 - 9429 - 9309

THAILAND
MRZ STANDARD CO.,LTD
746 - 754 MAHACHAI ROAD.,
WANGBURAPAPIROM, PHRANAKORN,
BANGKOK, 10200 THAILAND
PHONE : +66 - 2 - 222 9181
FAX : +66 - 2 - 224 6795

SINGAPORE
WO KEE HONG (S) PTE LTD
WO KEE HONG CENTRE
NO.23, LORONG 8, TOA PAYOH
SINGAPORE 319257
PHONE : +65 2544555
FAX : +65 2502213

NEW ZEALAND
SCAN AUDIO PTY. LTD.
8C PIERMARK DRIVE, ALBANY.
NORTH SHORE, AUCKLAND.
NEW ZEALAND
PHONE : +64 - 9444 - 4710
FAX : +64 - 9444 - 1346

TAIWAN
PAI- YUING CO., LTD.
6 TH FL NO, 148 SUNG KIANG ROAD,
TAIPEI, 10429, TAIWAN R.O.C.
PHONE : +886 - 2 - 25221304
FAX : +886 - 2 - 25630415

MALAYSIA
WO KEE HONG ELECTRONICS SDN. BHD.
NO. 102 JALAN SS 21/35, DAMANSARA
UTAMA, 47400 PETALING JAYA
SELANGOR DARUL EHSAN, MALAYSIA
PHONE : +60 3 - 7184666
FAX : +60 3 - 7173828

JAPAN *Technical*
MARANTZ JAPAN, INC.
35- 1, 7- CHOME, SAGAMIONO
SAGAMIHARA - SHI, KANAGAWA
JAPAN 228-8505
PHONE : +81 42 748 1013
FAX : +81 42 748 9190

日本マランツ株式会社
本 社 〒228-8505
神奈川県相模原市相模大野7-35-1
営業本部 〒150-0022
東京都渋谷区恵比寿南1-11-9

KOREA
MK ENTERPRISES LTD.
ROOM 604/605, ELECTRO-OFFICETEL, 16-58,
3GA, HANGANG-RO, YONGSAN-KU, SEOUL
KOREA
PHONE : +822 - 3232 - 155
FAX : +822 - 3232 - 154

SHOCK, FIRE HAZARD SERVICE TEST :

CAUTION : After servicing this appliance and prior to returning to customer, measure the resistance between either primary AC cord connector pins (with unit NOT connected to AC mains and its Power switch ON), and the face or Front Panel of product and controls and chassis bottom.

Any resistance measurement less than 1 Megohms should cause unit to be repaired or corrected before AC power is applied, and verified before it is return to the user/customer.

Ref. UL Standard No. 1492.

In case of difficulties, do not hesitate to contact the Technical Department at above mentioned address.

1. TECHNICAL SPECIFICATIONS

FM Tuner section

Frequency Range	87.5 - 108.0 MHz
Usable Sensitivity	IHF 0.9 uV/10.8 dBf
Signal to Noise Ratio	
/01B/02B version	Mono/Stereo 70/65 dB
U version	Mono/Stereo 80/73 dB
Distortion	Mono/Stereo 0.2/0.5 %
Stereo separation	
/01B/02B version	1 kHz 45 dB
U version	1 kHz 48 dB
A.C.S	±400 kHz 55 dB
Image Rejection	98 MHz 50 dB
Tuner Output Level	1 kHz, ±40 kHz Dev 500mV
/01B/02B version	1 kHz, ±40 kHz Dev 500mV
U version	1 kHz, ±75 kHz Dev 940mV

AM Tuner Section

Frequency Range	
/01B/02B version	522-1620 kHz
Uversion	520-1710 kHz
Usable Sensitivity	Loop 500 µV/m
Signal to Noise Ratio	50 dB (at 94 dB/m)
Distortion	1 kHz, 30 % Mod. 0.5 % (at 85 dB/m)
Selectivity	±10 kHz 25 dB

Audio Section

Rated Power (5ch drive)	
Front	20 Hz - 20 kHz 8 ohms 50 W/Ch
Center	1 kHz 8 ohms 50 W/Ch
Surround	1 kHz 8 ohms 50W + 50W/Ch
THD Front	20 Hz - 20 kHz 8 ohms 0.09 %
Input Sensitivity/Impedance	
Line	200 mV/47 k ohms
Signal to Noise Ratio	
Line	98 dB

Video Sectoin

Input/Output Level/Impedance	1.0 Vp-p/75 ohms

Others

Power Supply	
/01B version	AC 115/230V 50/60 Hz
/02B version	AC 230V/50 Hz
U version	AC 120V/60 Hz
Power Consumption	280 W

Dimensions

Width	442 mm
Height	152 mm
Depth	386 mm
Weight	11.5 kg

Specifications subject to change without prior notice.

2. WIRING DIAGRAM

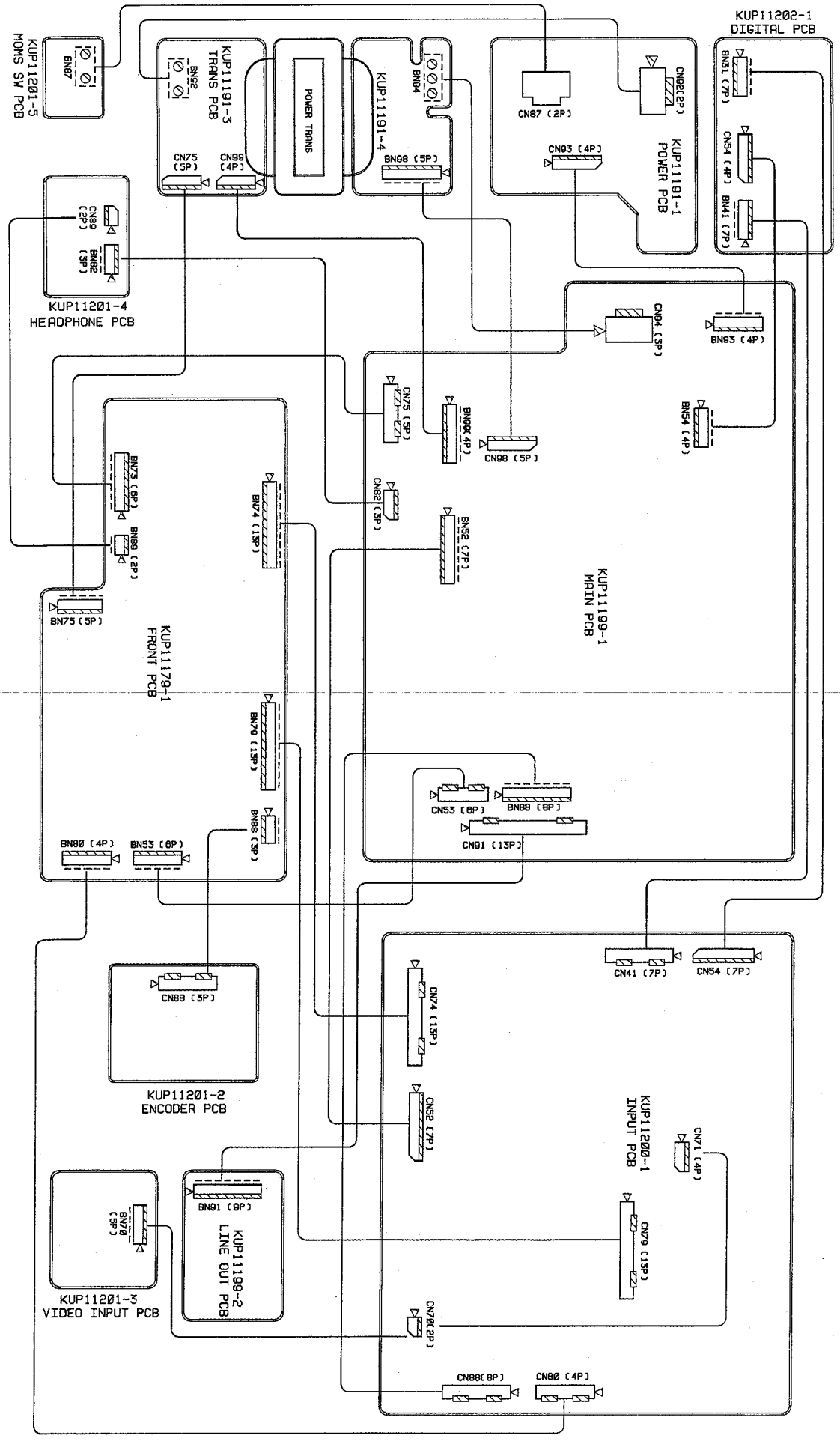

3. BLOCK DIAGRAM

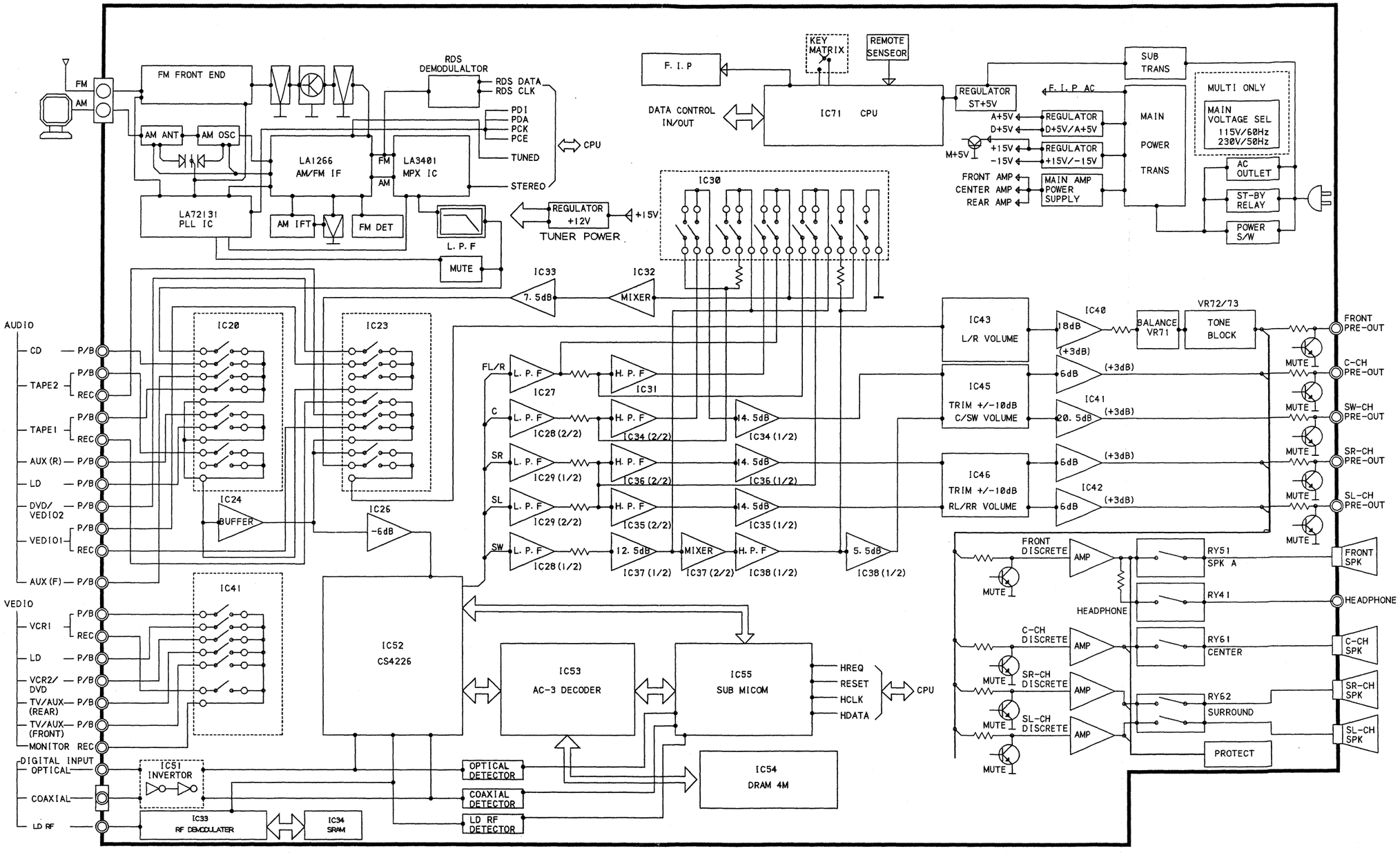

4. SCHEMATIC DIAGRAM AND PARTS LOCATIONS

MAIN SCHEMATIC DIAGRAM

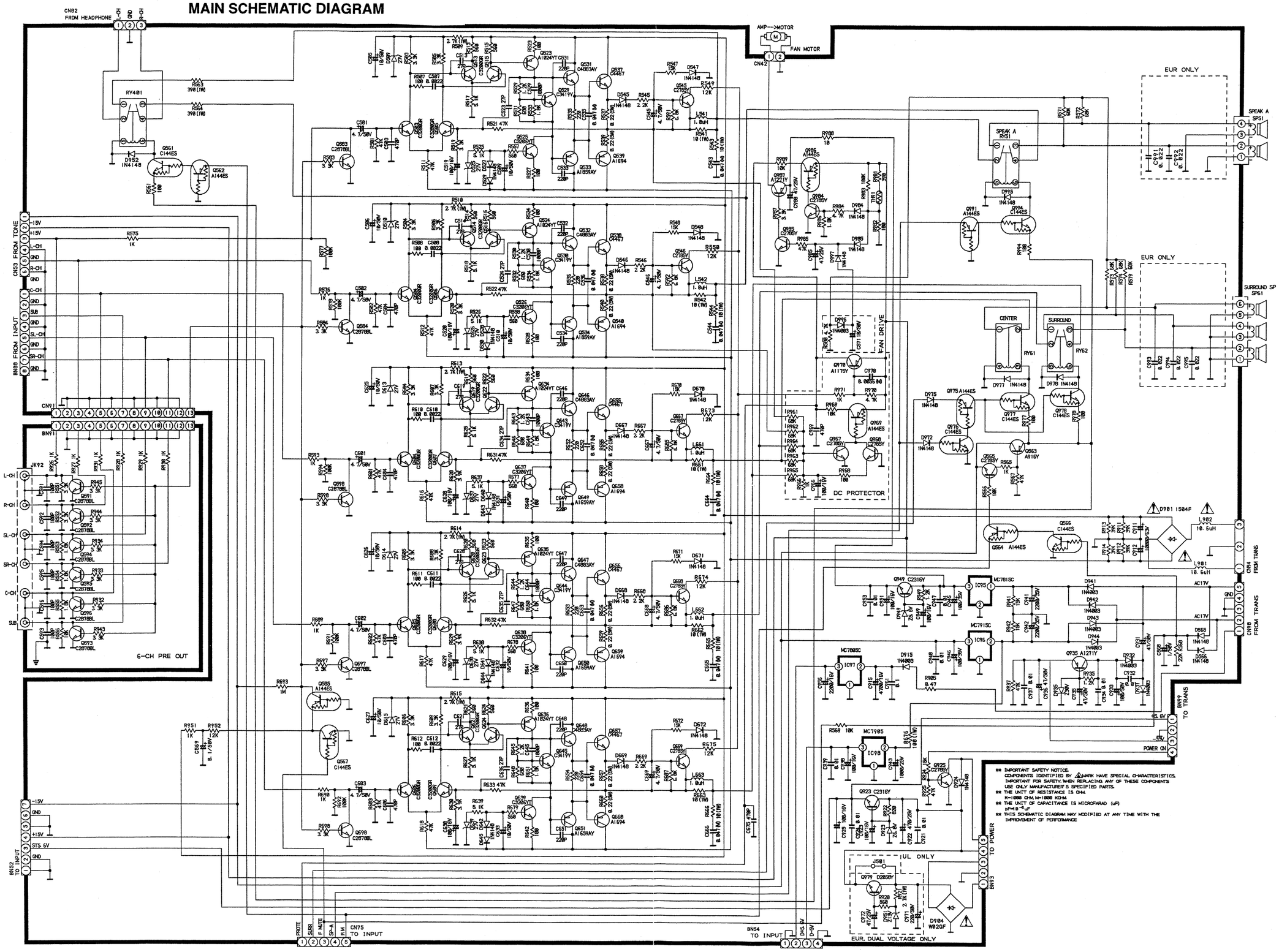

** IMPORTANT SAFETY NOTICE.
COMPONENTS IDENTIFIED BY ⚠ MARK HAVE SPECIAL CHARACTERISTICS.
IMPORTANT FOR SAFETY.WHEN REPLACING ANY OF THESE COMPONENTS
USE ONLY MANUFACTURER'S SPECIFIED PARTS.

** THE UNIT OF RESISTANCE IS OHM.
K=1000 OHM,M=1000 KOHM

** THE UNIT OF CAPACITANCE IS MICROFARAD (uF)
pF=10^-6uF

** THIS SCHEMATIC DIAGRAM MAY MODIFIED AT ANY TIME WITH THE
IMPROVEMENT OF PERFORMANCE

MAIN BOARD

Q979 IC98 Q923 Q925 IC97

Q669 Q648 Q657 Q644 Q668 Q647 Q656 Q667 Q646 Q655

Q636 Q639 Q635 Q619~Q624 Q638 Q634 Q604~Q609 Q637

Q660 Q651 Q645 Q650 Q659 Q649 Q658 Q643

Q697 Q698 Q977 Q978 Q975 Q967 Q976 Q969 Q968

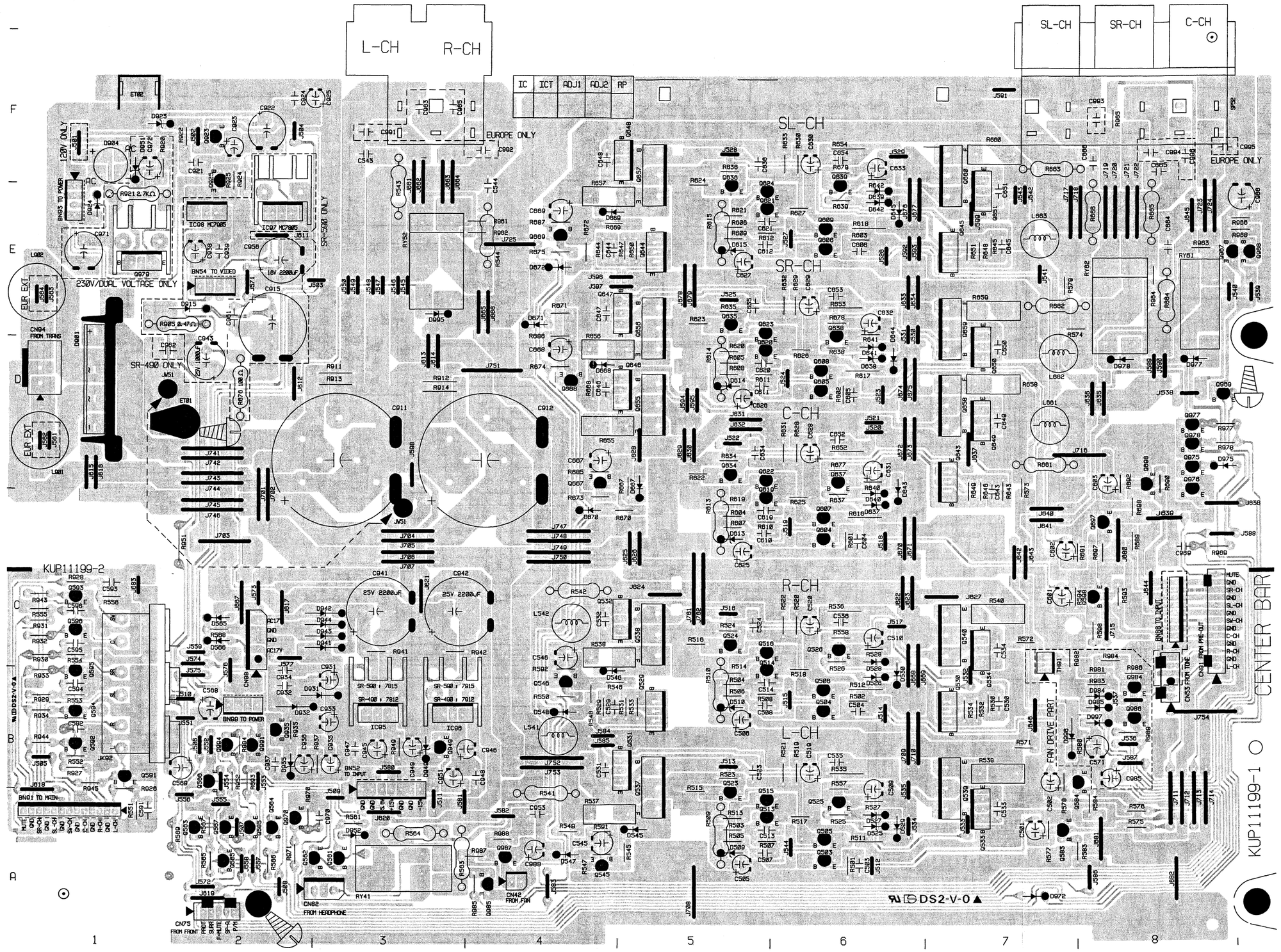

Q593
Q596
Q595
Q594
Q592
Q591

Q566 Q994 Q991 Q935 Q970 IC95 IC96 Q987 Q546 Q545 Q532 Q538 Q537 Q524 Q515 Q516 Q506 Q505 Q526 Q540 Q530 Q534 Q583 Q598 Q984
Q563 Q567 Q585 Q565 Q564 Q562 Q561 Q949 Q985 Q531 Q529 Q523 Q513 Q514 Q504 Q503 Q525 Q539 Q533 Q584 Q986

INPUT SCHEMATIC DIAGRAM

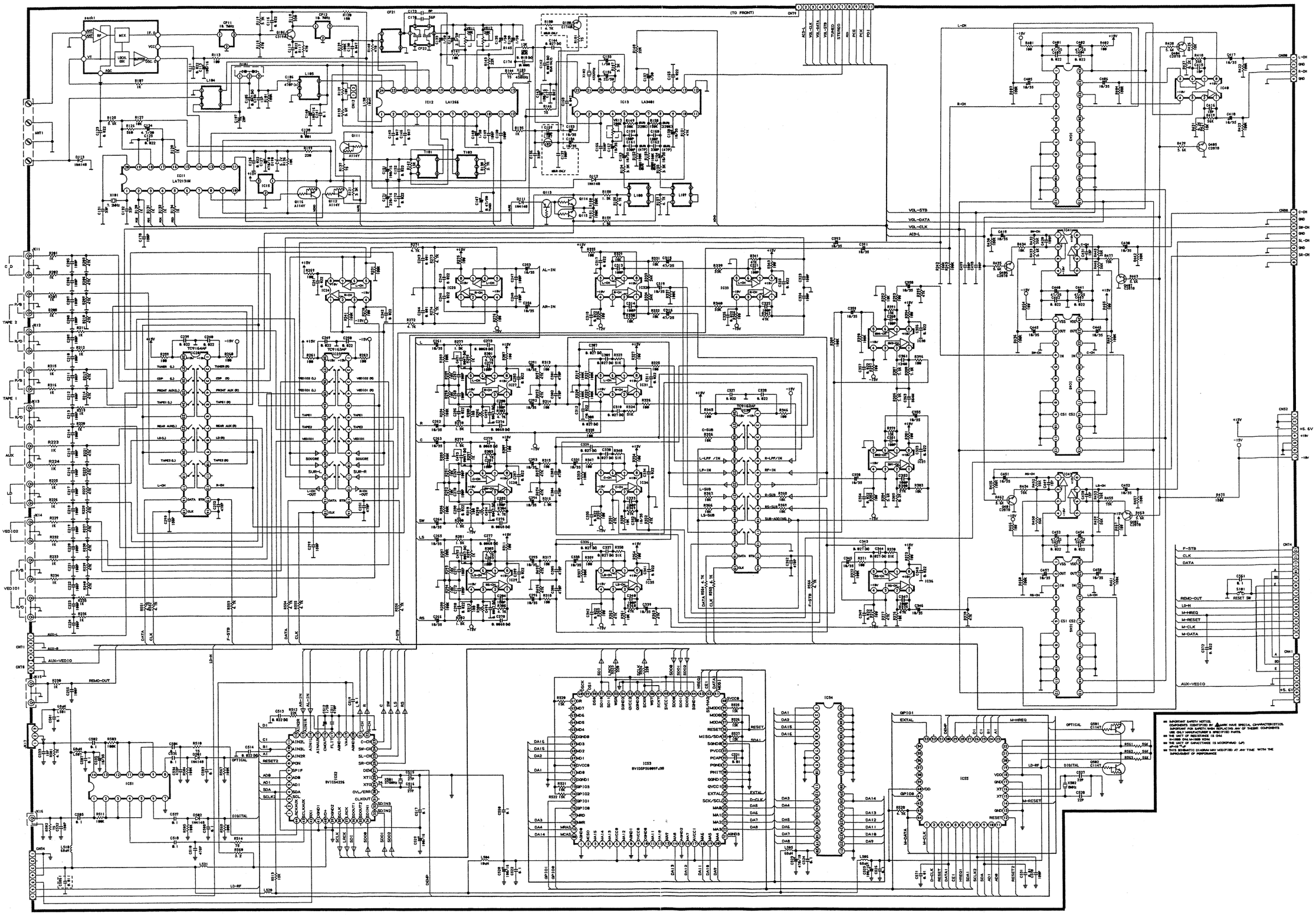

INPUT BOARD

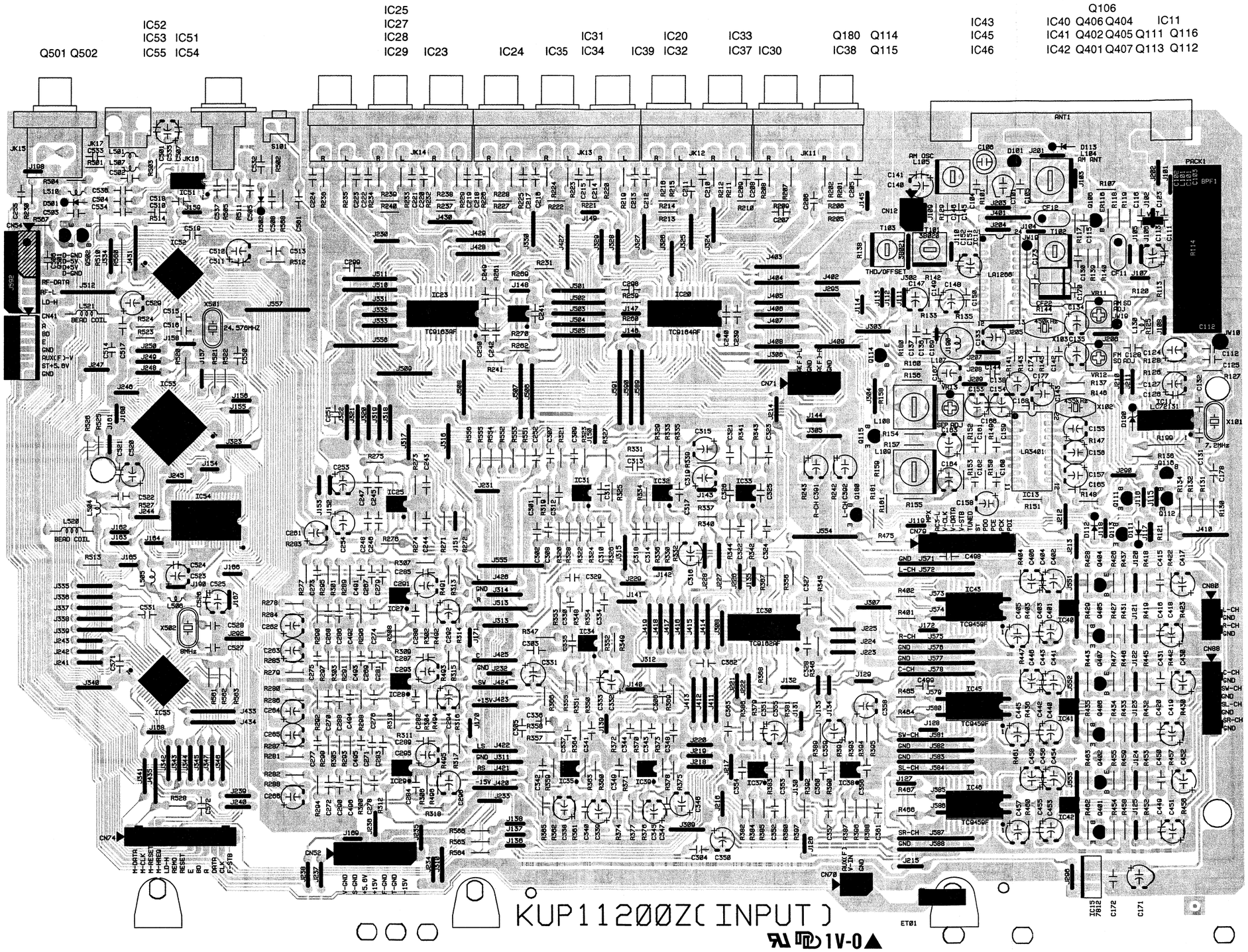
Q501 Q502
IC52
IC53 IC51
IC55 IC54
IC25
IC27
IC28
IC29 IC23
IC24 IC35
IC31
IC34 IC39
IC20
IC32
IC33
IC37 IC30
Q180 Q114
IC38 Q115
IC43
IC45
IC46
Q106
IC40 Q406 Q404 IC11
IC41 Q402 Q405 Q111 Q116
IC42 Q401 Q407 Q113 Q112
KUP1120ØZ(INPUT)
1V-0

FRONT SCHEMATIC DIAGRAM

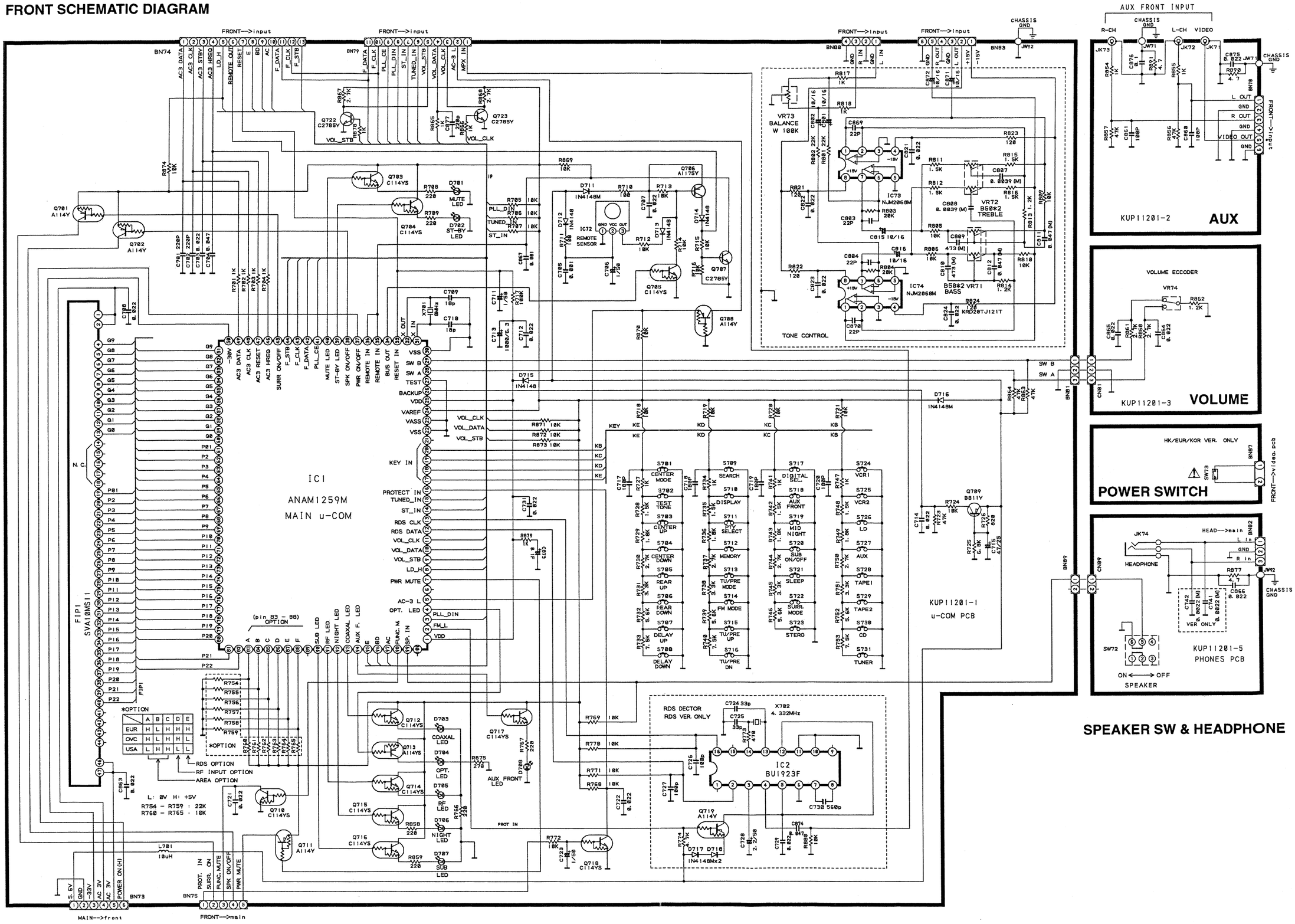

FRONT BOARD

Q707 Q704 Q703 Q702 Q708 Q722 Q723 Q709 IC2 Q719
Q706 Q714 Q712 Q701
Q705 Q716 Q715 Q713 Q717 IC72 Q711 Q718 IC1 Q710

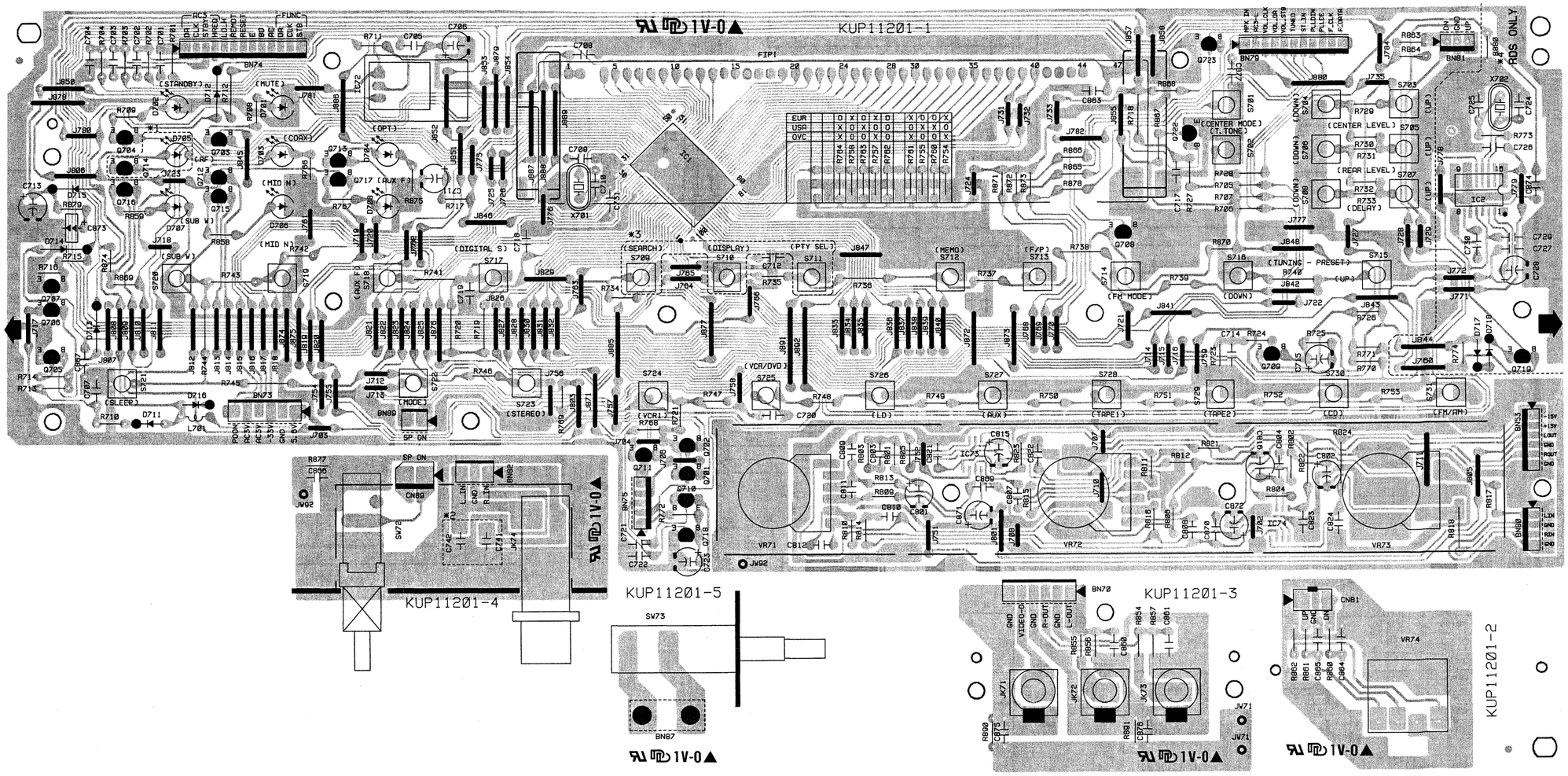

SPEAKER SW & HEADPHONE POWER SWITCH AUX VOLUME

RF SCHEMATIC DIAGRAM

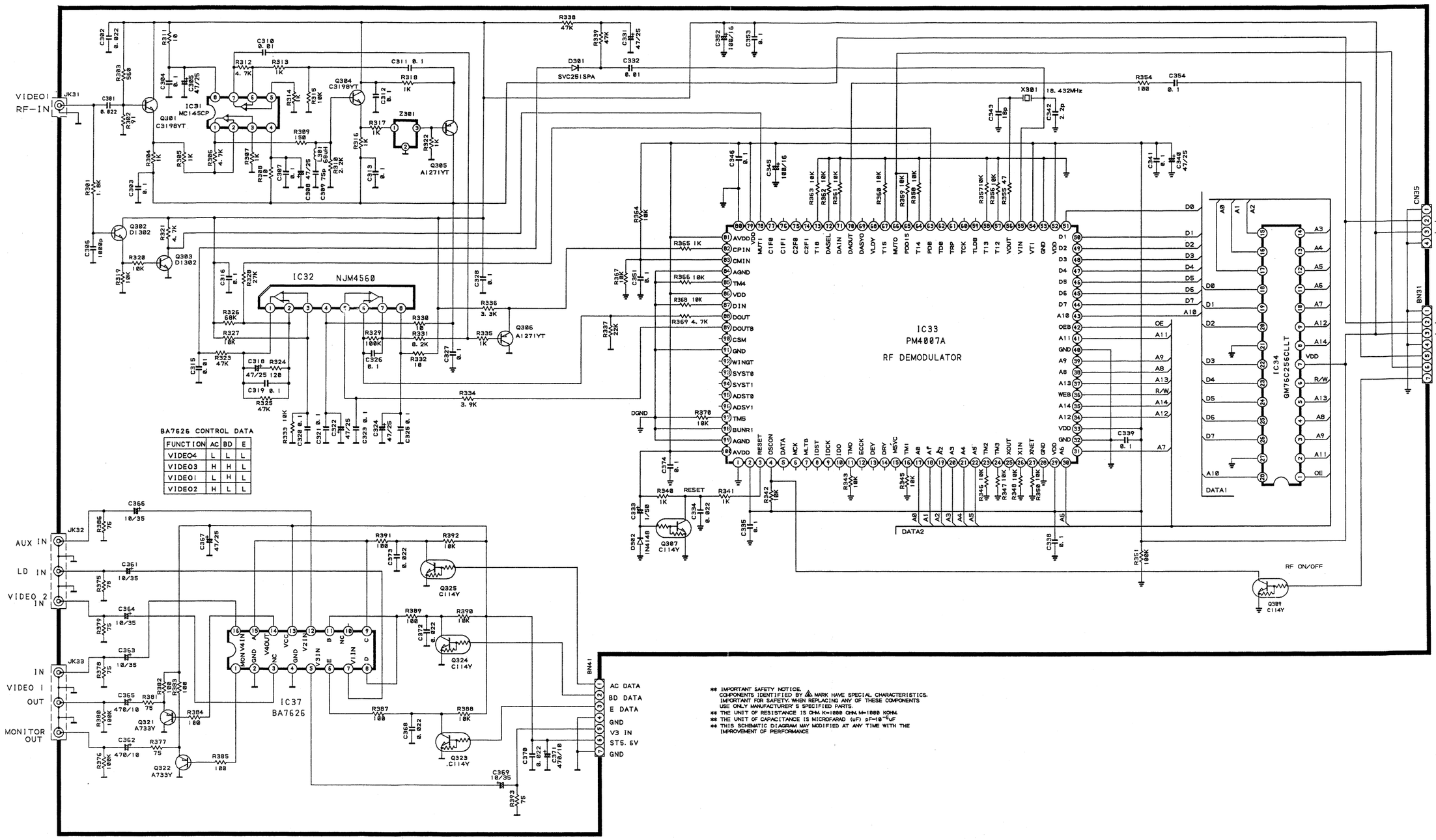

** IMPORTANT SAFETY NOTICE.
COMPONENTS IDENTIFIED BY ⚠ MARK HAVE SPECIAL CHARACTERISTICS.
IMPORTANT FOR SAFETY. WHEN REPLACING ANY OF THESE COMPONENTS
USE ONLY MANUFACTURER' S SPECIFIED PARTS.
** THE UNIT OF RESISTANCE IS OHM. K=1000 OHM. M=1000 KOHM.
** THE UNIT OF CAPACITANCE IS MICROFARAD (uF) pF=10^{-6}uF
** THIS SCHEMATIC DIAGRAM MAY MODIFIED AT ANY TIME WITH THE
IMPROVEMENT OF PERFORMANCE

RF BOARD

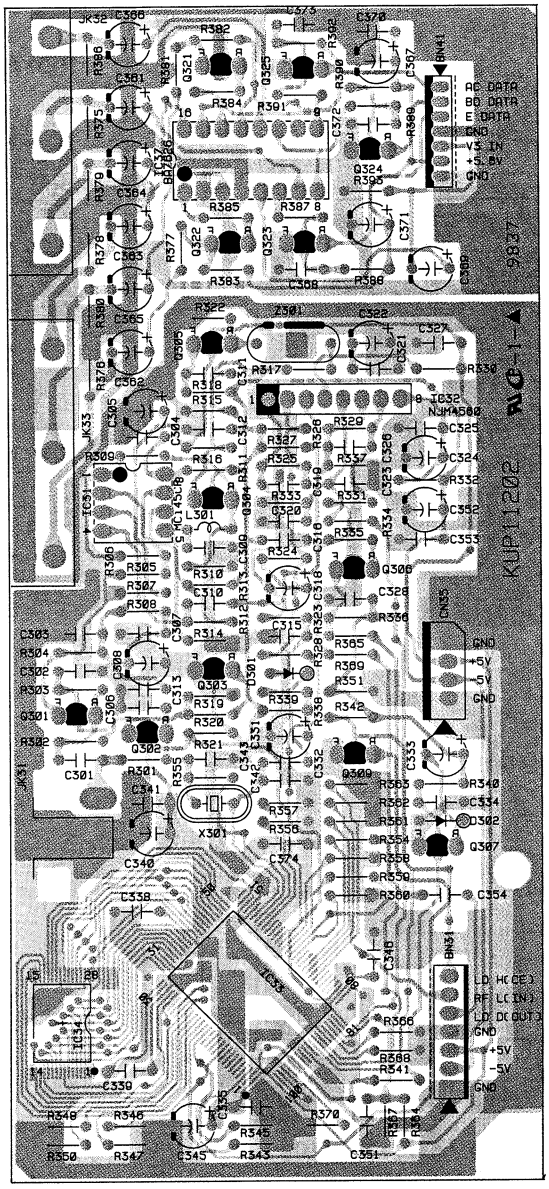
Q321 Q325
IC37 Q324
Q322 Q323
Q305
IC32
IC31 Q304
Q306
Q303
Q301
Q302
Q309
Q307
IC33
IC34

VIDEO BOARD

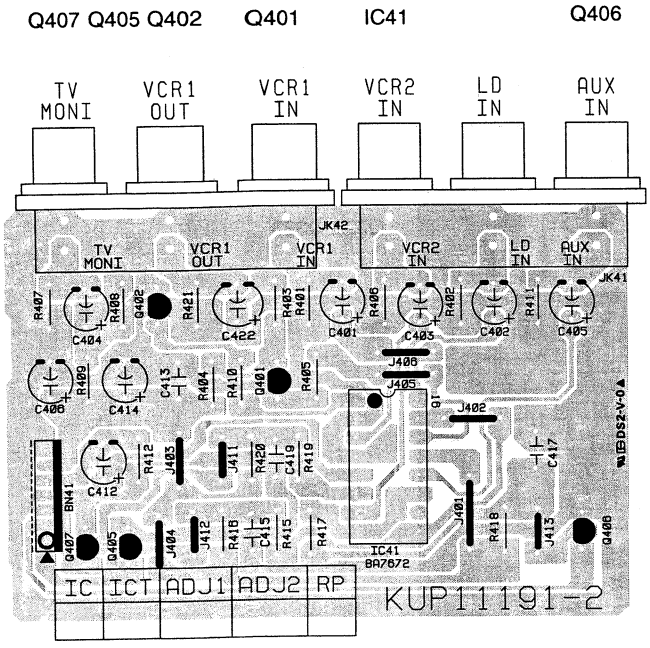

POWER

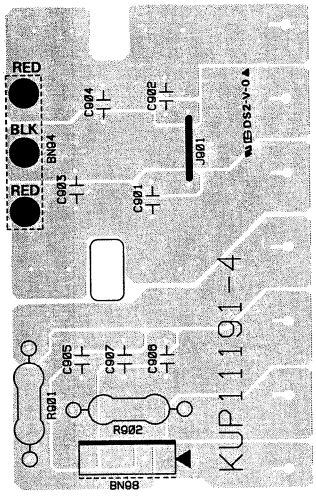

POWER

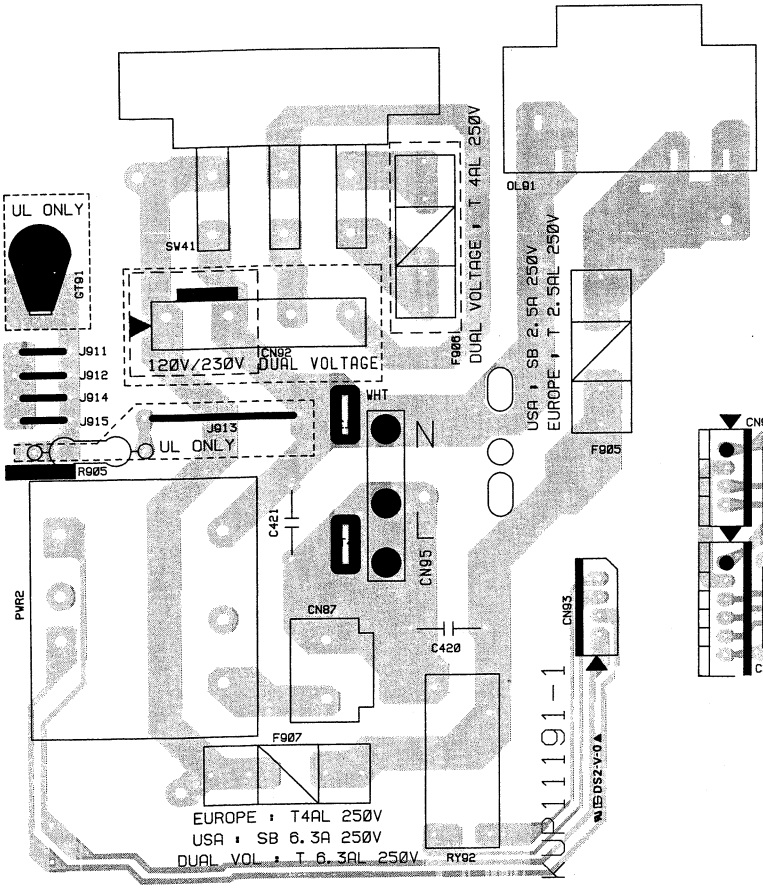

TRANS

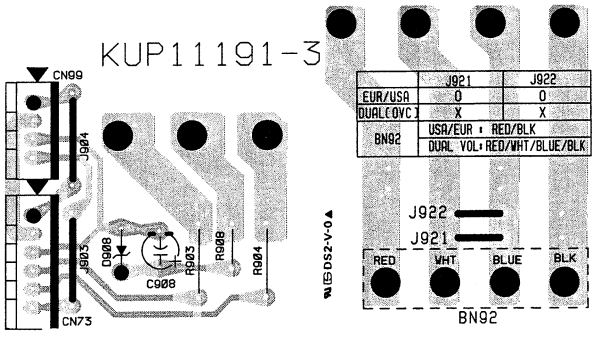

VIDEO SCHEMATIC DIAGRAM

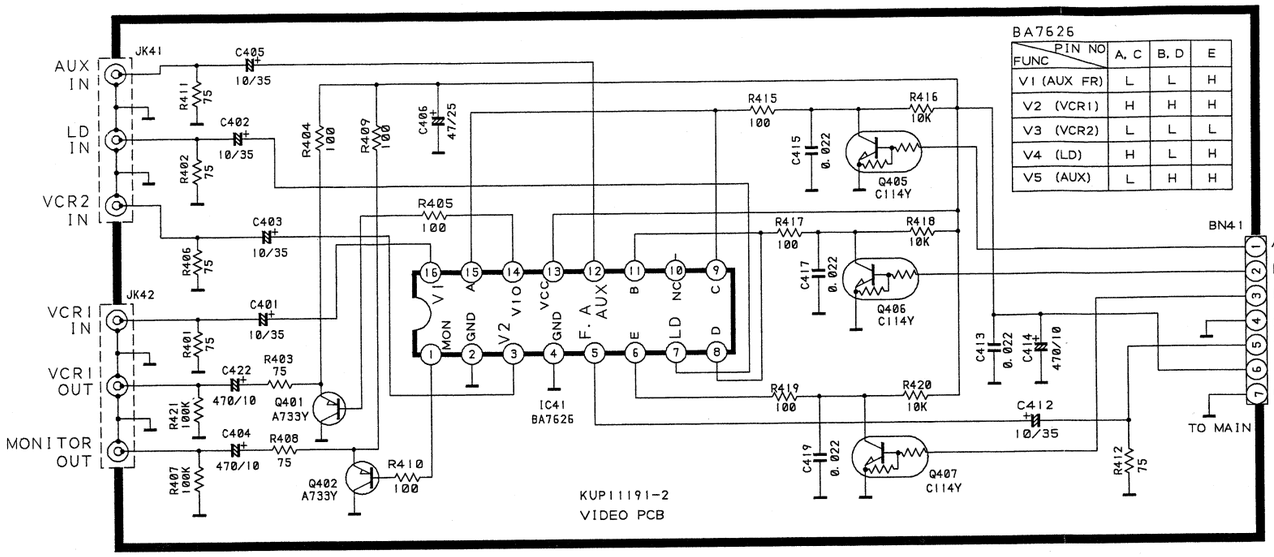

BA7626

FUNC \ PIN NO	A, C	B, D	E
V1 (AUX FR)	L	L	H
V2 (VCR1)	H	H	H
V3 (VCR2)	L	L	L
V4 (LD)	H	L	H
V5 (AUX)	L	H	H

* IMPORTANT SAFETY NOTICE.
COMPONENTS IDENTIFIED BY ⚠ MARK HAVE SPECIAL CHARACTERISTICS.IMPORTANT FOR SAFETY.
WHEN REPLACING ANY OF THESE COMPONENTS USE ONLY MANUFACTURER' S SPECIFIED PARTS.

1. THE UNIT OF RESISTANCE IS OHM. K=1000 OHM. M=1000 KOHM.
2. THE UNIT OF CAPACITANCE IS MICROFARAD (uF) pF= 10^{-6}uF
3. THIS SCHEMATIC DIAGRAM MAY MODIFIED AT ANY TIME WITH THE IMPROVEMENT OF PERFORMANCE

OPTION

OPTION	SR490/590 EUR	SR490/590 UL	SR490/590 MULTI	PM490 MULTI
OPTION 1 (F905)	T 2. 5A 250V	SB 2. 5A 250V	T 2. 5A 250V	T 2. 5A 250V
OPTION 2 (F906)	X	X	T 4A 250V	T 4A 250V
OPTION 3 (F907)	T 4A 250V	SB 6. 3A 250V	T 6. 3A 250V	T 6. 3A 250V
OPTION 4 (POWER)	AC 230V/50Hz	AC 120V/60Hz	230/115V 60/50Hz	230/115V 60/50Hz
OPTION 5 (OL91)	EUR 1P	UL 2P	EUR 1P	EUR 1P

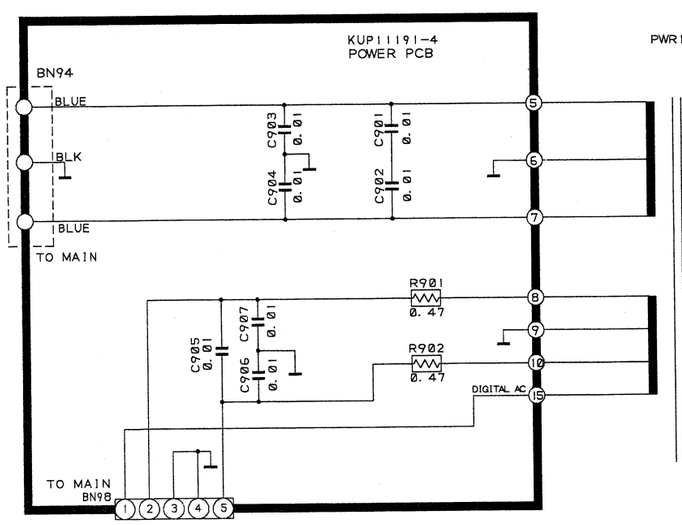

POWER

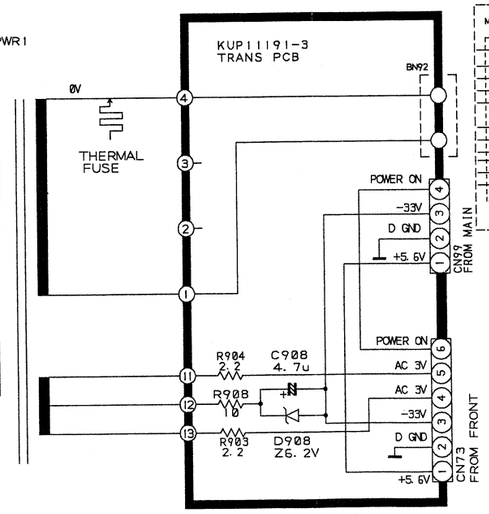

TRANS

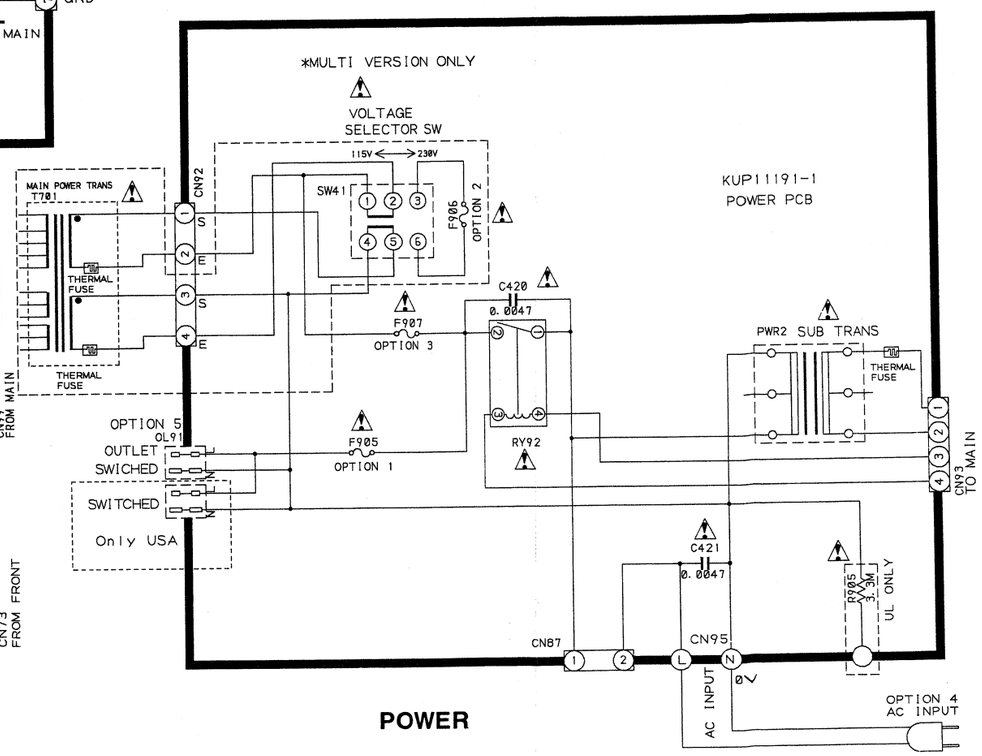

POWER

5. COMPONENT DESCRIPTION

IC1 : TMP87PM78F

1. Pin Configuration

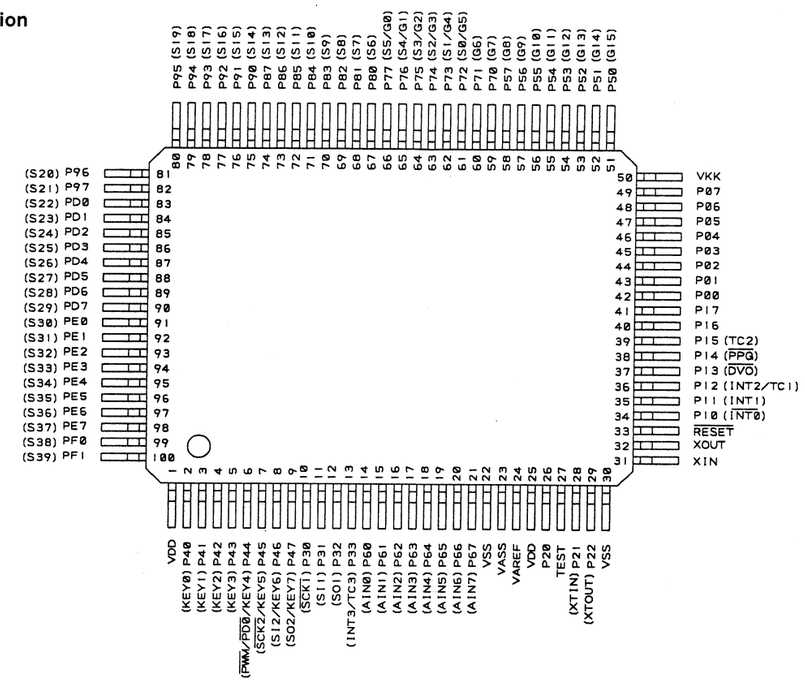

2. Block Diagram

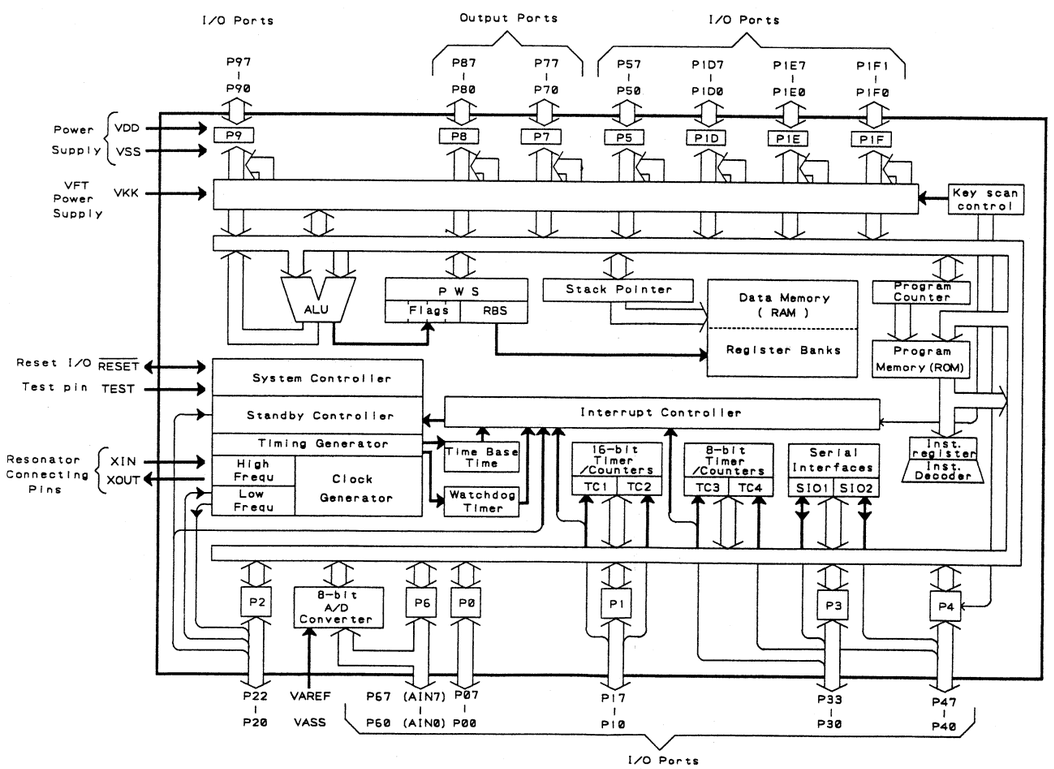

3. Pin Functions

PIN No.	SYMBOL	I/O	DESCRIPTION
1,25	VDD		Power supply (+5V)
2	FM-L	O	Output for FM/AM (at "L", it's FM)
3	PLL-DIN	I	Data input for LC72131M
4	OPT. LED	O	Output for driving OPT. LED
5	AC-3L	O	Output for driving Q401, Q402, Q404, Q405, Q406, Q407
6	N.C		No connection
7	PWR MUTE	O	Output for power mute (at "H", it's active)
8	LD-H	O	Chip enable for PM4007A
9	VOL-STB	O	STB/CLK/DATA Output for KIC9162, KIC6163, KIC9164
10	VOL-DATA	O	
11	VOL-CLK	O	
12	RDS DATA	I	Input for RDS data
13	RDS CLK	I	Input for RDS clock
14	ST-IN	I	Input for STEREO/MONO (at "L", it's stereo)
15	TUND-IN	I	Input for tuned (at "L", it's active)
16	PROTEC IN	I	Signal input for protection
17~21	KEY IN	I	Data input for key matrix
22,23,27	VSS,VASS,TEST		Ground
24	VAREF		Reference voltage
26	BACKUP	I	Input for backup mode
28	SW B	I	Input for master volume UP/DOWN
29	SW A	I	
30	VSS		Ground
31,32	CRYSTAL IN/OUT	I/O	Input/output for crystal oscillator
33	RESET IN	I	Input for system reset
34	BUS OUT	O	Output for remocon data
35,36	REMOTE IN	I	Input for remocon data
37	PWR. ON/OFF	O	Output for power on/off (at "H", is's power on)
38	SPK. ON/OFF	O	Output for speaker on/off (at "L", it's speaker on)
39	ST-BY LED	O	Output for driving STANDBY LED (at "H", it's active)
40	MUTE LED	O	Output for driving MUTE LED (at "H", it's active)
41	PLL-CE	O	Chip enable output for LC72131M
42	F-DATA	O	STB/CLK/DATA Output for TC9162, TC9163, LC72131M
43	F-CLK	O	
44	F-STB	O	
45	SURR. ON/OFF	O	Output for surround on/off (at "L", it's surround on)
46	AC3 HREQ	O	HREQ/RESET/CLK/DATA output for sub μ-com (IC55)
47	AC3 RESET		
48	AC3 CLK		
49	AC3 DATA		
50	30V	I	-30V Power supply for F.I.P
51~82	F.I.P	O	Segment signal output For F.I.P
83~87	OPTION	I	Input for option

Version \ Option	Area A	Area B	Area C	RF D	RDS E
02B (EUR)	H	L	H	L	H
U (USA)	L	H	H	L	L
01B (MULTI)	H	L	H	L	L

PIN	SYMBOL	I/O	DESCRIPTION
88,89	N.C		NO connection
90	SUB LED	O	Output for driving Sub woofer LED
91	RF LED	O	Output for driving RF LED (at "H", it's active)
92	NIGHT LED	O	Output for driving NIGHT MODE LED (at "H", it's active)
93	COAXAL LED	O	Output for driving COAXIAL LED (at "H", it's active)
94	AUX F. LED	O	Output for driving AUX FRONT LED (at "H", it's active)
95~97	AC,BD,E	O	Output for BA7626

PIN NO. \ FUNC.	AUX FRON	VCR1	VCR2	LD	AUX
95	L	H	L	H	L
96	L	H	L	L	H
97	H	H	L	H	H

PIN	SYMBOL	I/O	DESCRIPTION
98	FUNC. M	O	Output for function mute (at "H", it's active)
99	SP. IN	I	Input for speaker on/off (at "H", it's speaker on)
100	N. C		No connection

6. ADJUSTMENT PROCEDURE

1. Equipment Required

AM Standard Signal Generator (AM SSG)	Audio Generator
Oscilloscope	Distortion Meter
AC Voltmeter	DC Voltmeter
FM Standard Signal Generator (FM SSG)	Stereo Modulator

Note : Disconnect external FM antenna prior to alignment

2. Tuner Adjustment test Points

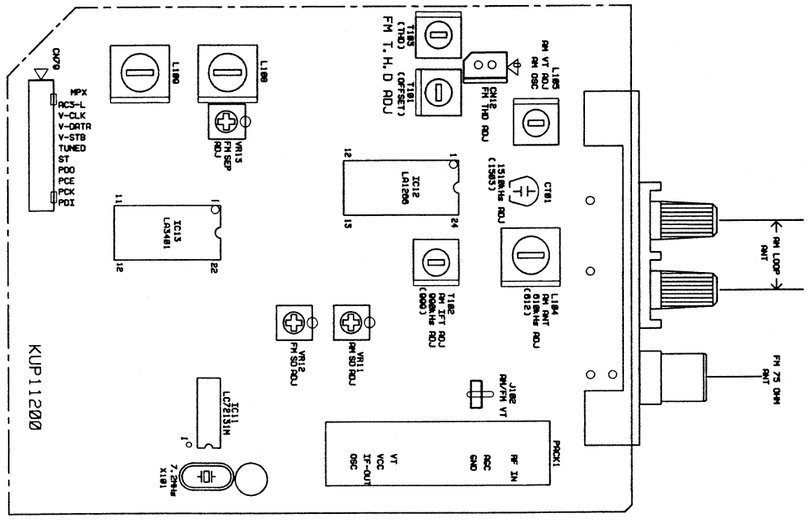

3. AM IF and RF Adjustment

Output of signal generator should not be greater than necessary to obtain an optimum output reading.
Signal generator modulation : 30 %
Switch : Press the BAND button to AM
RF signal frequency : 400 Hz
Remark : ( ) /01B, /02B version only

Step	Subject	Signal Generator Frequency	Set Frequency Setting	Equipment Connection	Adjustment Point	Adjust for
1	tuning voltage	520(522) kHz	520(522) kHz	DC Voltmeter to J102	L105	DC 1.0V ± 0.2V
2	RF Tuning	610(612) kHz	610(612) kHz ①	AC Voltmeter to TAPE OUT jack	L104	Maximize audio output
		1510(1503) kHz	1510(1503)kHz②		CT01	
		※ Feed signal should be fed to loop antenna through the test loop antenna 60 cm distant from the appliance.				
		※ Repeat the step ① and ② until no further improvement occurs.				
3	IF	990 kHz (999 kHz)	990 kHz (999 kHz)	AC Voltmeter to TAPE OUT jack	T102	Symmetrical curve on AM IF genescope
4	Tuned Level	990 kHz (999 kHz)	990 kHz (999 kHz)	AC Voltmeter to TAPE OUT jack	VR11	"Tuned" flag in the FL display light on

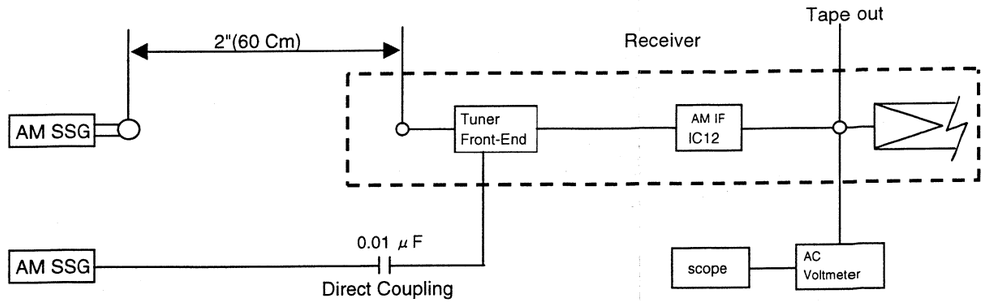

AM Adjustment Connection

4. FM IF Adjustment

Output of signal generator shoul not be greater than necessary to obtain optimum output reading.
Signal generator deviation : 75 kHz(40kHz)
Switch : Press the BAND button to FM and the FM MODE button to MONO
RF signal frequency : 1 kHz
Remark : ( ) /01B, /02B version only

Step	Subject	Signal Generator Frequency	Set Frequency Setting	Equipment Connection	Adjustment Point	Adjust for
1	Tuning Band Width	98.0MHz (98.1)MHz	98.0MHz ① (98.1)MHz	DC voltmeter to CN12(TUNER B'D)	T101	Zero reading on DC Voltmeter
	THD	98.0MHz (98.1)MHz	98.0MHz ② (98.1)MHz	Distortion meter to TAPE OUT jack.	T102	Minimize distortion
		※ Repeat the step ① and ② until no further improvement occurs.				
2	Tuned Level	98.0MHz (98.1)MHz	98.0MHz (98.1)MHz	Distortion meter to TAPE OUT jack.	VR12	FL Display "TUNED" indication on receiver with FM SSG Output level of 10 μV/m
3	Seperation Adjust	98.0MHz (98.1)MHz	98.0MHz (98.1)MHz	AC Voltmeter to Tape out jack	VR13	Maximize seperation

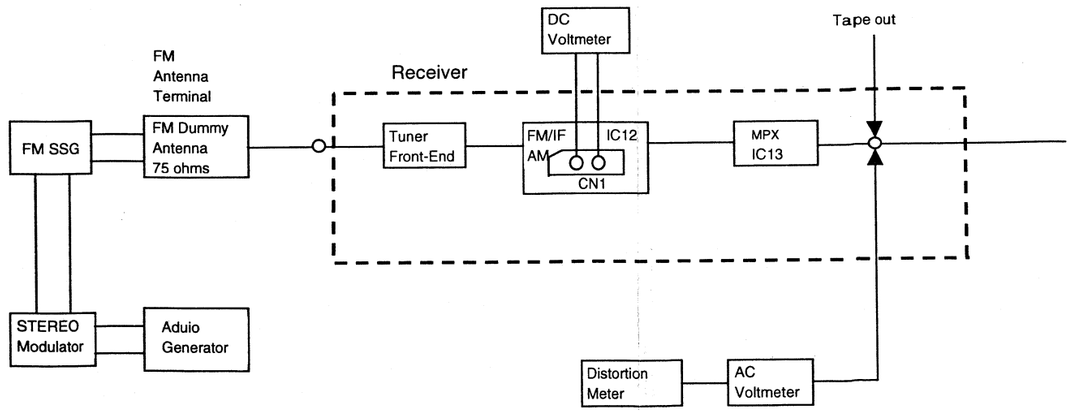

FM RF/IF and MPX Adjustment Connection

7. EXPLODED VIEW AND PARTS LIST

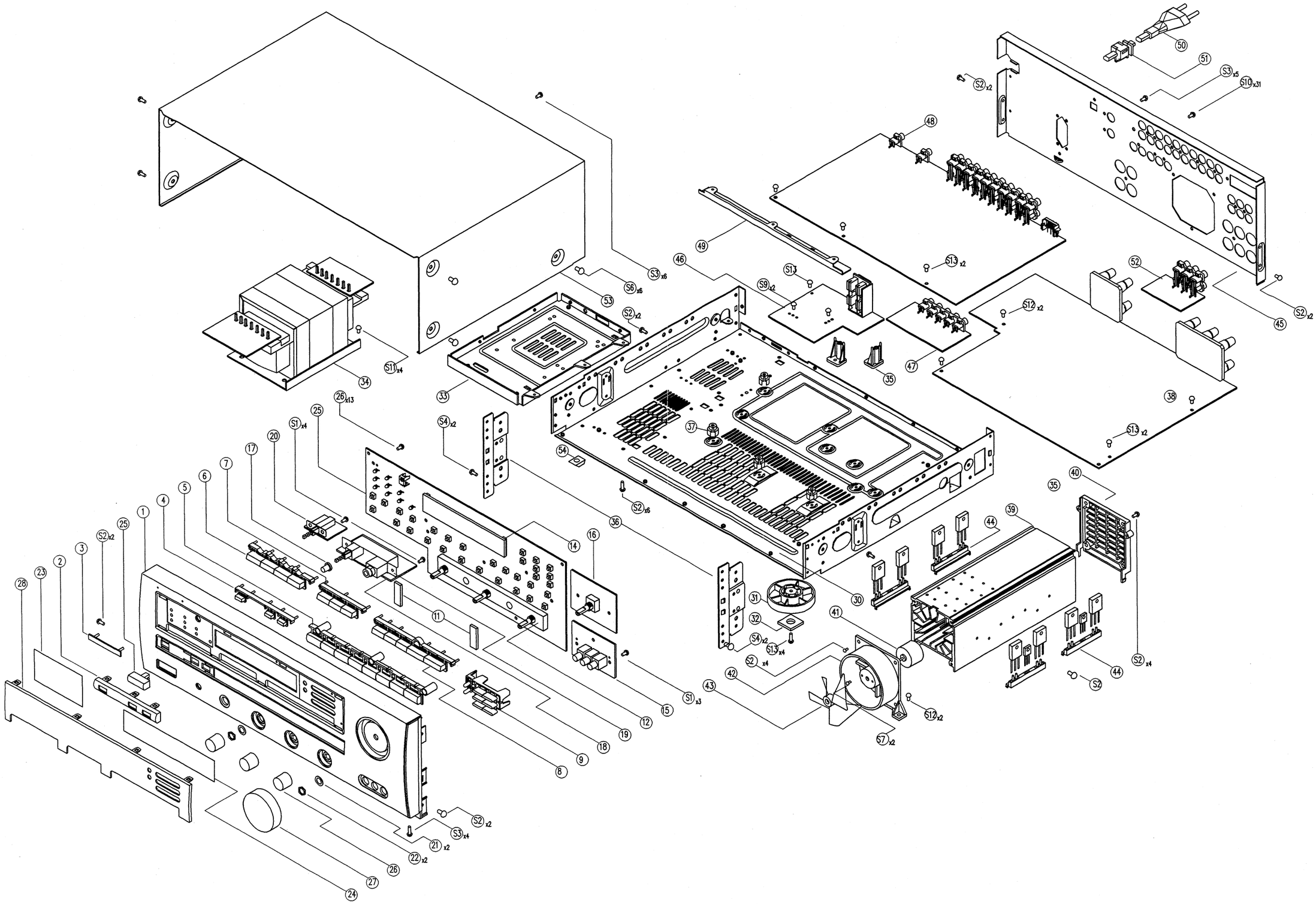

(VERS. :VERSION, U:U.S.A., F:JAPAN, K:FAR EAST, **:EUROPE)

POS. NO	VERS. COLOR	PART NO. (FOR PCS)	DESCRIPTION	PART NO. (MJI)
1		9965 000 00186	PANEL ,FRONT	264W248020
2		4822 442 01928	CAP DECORATION	263W053010
3		4822 454 13477	BADGE MARANTZ	243W251010
4		4822 410 12554	KNOB SURROUND	265W270020
5		4822 410 12564	KNOB FUNCTION	265W270010
6		4822 410 12556	KNOB 4KEY	265W270040
7		4822 410 12565	KNOB 3KEY	265W270030
8		4822 410 12566	KNOB 5KEY	265W270050
9		4822 410 12557	KNOB LEVEL	263W154020
11		nsp	RUBBER	nsp
12		nsp	CAN SHIELD	nsp
14		nsp	BRACKET SUPPORT	nsp
17		4822 410 12561	KNOB SPEAKER	254W270010
19		nsp	BRACKET SHIELD	nsp
20		nsp	POWER PCB ASS'Y	nsp
23		nsp	SHEET LED	nsp
24		nsp	SHEET DISPLAY	nsp
25		4822 410 12224	KNOB POWER	236W270010
26		4822 410 12558	KNOB ROTARY	254W154020
27		4822 410 12553	KNOB VOLUME	265W154010
28		9965 000 00187	WINDOW FIP	264W158020
30		nsp	CHASSIS BOTTOM	nsp
31		4822 462 11013	FOOT	243W057010
32		nsp	RUBBER CUSHION	nsp
33		nsp	BRACKET TRANS	nsp
34		9965 000 00188	TRANS.MAINS 230V	*TS001050R
35		nsp	HOLDER GUIDE (MECHA)	nsp
36		nsp	BRACKET SIDE	nsp
37		nsp	HOLDER PCB	nsp
40		9965 000 00189	COVER HEAT SINK	264W401020
▲ 41		9965 000 00190	MOTOR	*MM001020R
42		9965 000 00191	FRAME FAN	264W401010
43		9965 000 00192	FAN A3-96-2231	264W279010
44		nsp	SUPPORT TR	nsp
45		nsp	PANEL REAR	nsp
49		nsp	BRACKET PCB	nsp
▲ 50		nsp	CORD POWER	nsp
51		nsp	BUSHING AC CORD	nsp
53		nsp	CABINET TOP	nsp
54		nsp	RUBBER	nsp
001T		4822 736 17121	MANUAL INSTRUCTION	264W851310
Z001		4822 219 10588	REMOTE CONTROLER RC580SR	ZK238W0020
Z002		nsp	ANT FM WIRE	nsp
Z003		nsp	AM LOOP ANT ASS'Y	nsp

8. ELECTRICAL PARTS LIST

ASSIGNMENT OF COMMON PARTS CODES.

RESISTORS

R * * * : 1) GD05 x x x 140, Carbon film fixed resistor, ±5% 1/4W
R * * * : 2) GD05 x x x 160, Carbon film fixed resistor, ±5% 1/6W
→ ① Resistance value

Examples
① Resistance value

0.1Ω 001	10Ω 100	1kΩ 102	100kΩ 104
0.5Ω 005	18Ω 180	2.7kΩ 272	680kΩ 684
1Ω 010	100Ω 101	10kΩ 103	1MΩ 105
6.8Ω 068	390Ω 391	22kΩ 223	4.7MΩ 475

Note : Please distinguish 1/4W from 1/6W by the shape of parts used actually.

CAPACITORS

C * * * : CERAMIC CAP.
3) DD1 x x x x 370, Ceramic capacitor
Disc type
Temp.coeff. P350~N1000, 50V
③ Capacity value
② Tolerance

Examples
② Tolerance (Capacity deviation)
± 0.25 pF 0
± 0.5 pF 1
± 5 % 5
* Tolerance of COMMON PARTS handled here are as follows :
0.5 pF - 5 pF ..... ± 0.25 pF
6 pF - 10 pF ..... ± 0.5 pF
12 pF - 560 pF ... ± 5 %
③ Capacity value

0.5 pF 005	3 pF 030	100 pF 101
1 pF 010	10 pF 100	220 pF 221
1.5 pF 015	47 pF 470	560 pF 561

C * * * : CERAMIC CAP.
4) DK16 x x x 300, High dielectric constant ceramic capacitor
Disc type
Temp.chara. 2B4, 50V
④ Capacity value

Examples
④ Capacity value

100 pF 101	1000 pF 102	10000 pF 103
470 pF 471	2200 pF 222	

C * * * : 5) ELECTROLY CAP.( ), 6)FILM CAP ( )
5) EA x x x x x x 10, Electrolytic capacitor
One-way lead type,Tolerance ±20%
⑥ Working voltage
⑤ Capacity value

Examples
⑤ Capacity value

0.1μF 104	4.7μF 475	100μF 107
0.33μF 334	10μF 106	330μF 337
1μF 105	22μF 226	1100μF 118
2200μF 228		

⑥ Working voltage

6.3 V 006	25 V 025
10 V 010	35 V 035
16 V 016	50 V 050

6) DF15 x x x 350 → Plastic film capacitor
DF15 x x x 310 One-way type, Mylar ±5% 50V
DF16 x x x 310 → Plastic film capacitor
One-way type, Mylar ±10% 50V
⑦ Capacity value

Examples
⑦ Capacity value

0.001μF (1000 pF) 102	0.1μF 104
0.0018μF 182	0.56μF 564
0.01μF 103	1μF 105
0.015μF 153	

NOTE :1) The above CODES(R * * *, R * * *, C * * *, C * * * and C * * *) are omitted on the schematic diagram in some case.
2) On the occasion, be confirmed the common parts on the parts list.
3) Refer to "Common Parts List" for the other common parts(**RI05, DD4, DK4**).

NOTE ON SAFETY FOR FUSIBLE RESISTOR :

The suppliers and their type numbers of fusible resistors are as follows ;

1 . KOA Corporation

Part No.(MJI)	Type No.(KOA)	Description
NH05 x x x 140 →	RF25S x x x x Ω J	(±5% 1/4W)
NH05 x x x 120 →	RF50S x x x x Ω J	(±5% 1/2W)
NH85 x x x 110 →	RF73B2A x x x x Ω J	(±5% 1/10W)
NH95 x x x 140 →	RF73B2E x x x x Ω J	(±5% 1/4W)

* Resistance value Resistance value(0.1 Ω- 10k Ω)

2. Matsushita Electronic Components Co., Ltd

Part No.(MJI)	Type No.(MEC)	Description
NF05 x x x 140 →	ERD-2FCJ x x x	(±5% 1/4W)
RF05 x x x 140		
NF02 x x x 140 →	ERD-2FCG x x x	(±2% 1/4W)
RF02 x x x 140		

* Resistance value

Examples
* Resistance value

0.1Ω 001	10Ω 100	1kΩ 102	100kΩ 104
0.5Ω 005	18Ω 180	2.7kΩ 272	680kΩ 684
1Ω 010	100Ω 101	10kΩ 103	1MΩ 105
6.8Ω 068	390Ω 391	22kΩ 223	4.7MΩ 475

ABBREVIATION AND MARKS

ANT.	: ANTENNA	BATT.	: BATTERY
CAP.	: CAPACITOR	CER.	: CERAMIC
CONN.	: CONNECTING	DIG.	: DIGITAL
HP	: HEADPHONE	MIC.	: MICROPHONE
μ -PRO	: MICROPROCESSOR	REC.	: RECORDING
RES.	: RESISTOR	SPK	: SPEAKER
SW	: SWITCH	TRANSF.	: TRANSFORMER
TRIM.	: TRIMMING	TRS.	: TRANSISTOR
VAR.	: VARIABLE	X' TAL	: CRYSTAL

NOTE ON SAFETY:

Symbol ⚠ Fire or electrical shock hazard. Only original parts should be used to replaced any part marked with symbol ⚠ Any other component substitution (other than original type), may increase risk of fire or electrical shock hazard.

安全上の注意：

⚠ がついている部品は、安全上重要な部品です。必ず指定されている部品番号の部品を使用して下さい。

(VERS. :VERSION, U:U.S.A., F:JAPAN, K:FAR EAST, **:EUROPE)

POS. NO	VERS. COLOR	PART NO. (FOR PCS)	DESCRIPTION	PART NO. (MJI)
			FRONT CIRCUIT BOARD	
			CAPACITORS	
C701		nsp	CER. 220pF 50V K	nsp
C702		nsp	CER. 220pF 50V K	nsp
C703		nsp	CER. 0.1µF 50V Z	nsp
C704		nsp	CER. 0.022µF 50V Z	nsp
C705		nsp	CER. 1000pF 50V K	nsp
C706		nsp	ELECT 1.0µF 50V	nsp
C707		nsp	CER. 0.022µF 50V Z	nsp
C708		nsp	CER. 0.022µF 50V Z	nsp
C709		nsp	CER. 18pF	nsp
C710		nsp	CER. 18pF	nsp
C711		nsp	ELECT 1.0µF 50V	nsp
C712		nsp	CER. 0.022µF 50V Z	nsp
C713		nsp	ELECT 1000µF 6.3V	nsp
C714		nsp	CER. 0.022µF 50V Z	nsp
C715		nsp	ELECT 47µF 25V	nsp
C717		nsp	CER. 180pF 50V K	nsp
C718		nsp	CER. 180pF 50V K	nsp
C719		nsp	CER. 180pF 50V K	nsp
C720		nsp	CER. 180pF 50V K	nsp
C721		nsp	CER. 0.022µF 50V Z	nsp
C722		nsp	CER. 0.022µF 50V Z	nsp
C723		nsp	ELECT 1µF 50V	nsp
C724		nsp	CER. 33pF 50V J	nsp
C725		nsp	CER. 33pF 50V J	nsp
C726		nsp	CER. 100pF 50V K	nsp
C727		nsp	CER. 100pF 50V K	nsp
C728		nsp	ELECT 2.2µF 50V	nsp
C729		nsp	CER. 0.022µF 50V Z	nsp
C730		nsp	CER. 560pF 50V K	nsp
C731		nsp	CER. 0.022µF 50V Z	nsp
C741		nsp	MYLAR 2200pF 50V J	nsp
C742		nsp	MYLAR 2200pF 50V J	nsp
C801		nsp	ELECT 10µF 16V	nsp
C802		nsp	ELECT 10µF 16V	nsp
C803		nsp	CER. 22pF 50V J	nsp
C804		nsp	CER. 22pF 50V J	nsp
C807		nsp	FILM 3900pF 63V J	nsp
C808		nsp	FILM 3900pF 63V J	nsp
C809		nsp	FILM 0.047µF 63V J	nsp
C810		nsp	FILM 0.047µF 63V J	nsp
C811		nsp	FILM 0.047µF 63V J	nsp
C812		nsp	FILM 0.047µF 63V J	nsp
C815		nsp	ELECT 10µF 16V	nsp
C816		nsp	ELECT 10µF 16V	nsp
C821		nsp	CER. 0.022µF 50V Z	nsp
C822		nsp	CER. 0.022µF 50V Z	nsp
C823		nsp	CER. 0.022µF 50V Z	nsp
C824		nsp	CER. 0.022µF 50V Z	nsp
C860		nsp	CER. 100pF 50V K	nsp
C861		nsp	CER. 100pF 50V K	nsp
C863		nsp	CER. 0.022µF 50V Z	nsp
C864		nsp	CER. 0.022µF 50V Z	nsp
C865		nsp	CER. 0.022µF 50V Z	nsp
C866		nsp	CER. 0.022µF 50V Z	nsp
C867		nsp	CER. 1000pF 50V K	nsp
C869		nsp	CER. 22pF 50V J	nsp
C870		nsp	CER. 22pF 50V J	nsp
C871		nsp	ELECT 10µF 16V	nsp
C872		nsp	ELECT 10µF 16V	nsp
C873		4822 124 12129	BACKUP EECS5R5V104	*EX000030R
C874		nsp	CER. 0.047µF 50V Z	nsp
C875		nsp	CER. 0.022µF 50V Z	nsp
C876		nsp	CER. 0.1µF 50V Z	nsp
C877		nsp	CER. 220pF 50V K	nsp

(VERS. :VERSION, U:U.S.A., F:JAPAN, K:FAR EAST, **:EUROPE)

POS. NO	VERS. COLOR	PART NO. (FOR PCS)	DESCRIPTION	PART NO. (MJI)
			DIODES	
D711		4822 130 30621	1N4148	QP13030621
D712		4822 130 30621	1N4148	QP13030621
D713		4822 130 30621	1N4148	QP13030621
D714		4822 130 30621	1N4148	QP13030621
D715		4822 130 30621	1N4148	QP13030621
D716		4822 130 30621	1N4148	QP13030621
D717		4822 130 30621	1N4148	QP13030621
D718		4822 130 30621	1N4148	QP13030621
			LEDS	
D701		4822 130 11674	SLR56VCT130	*HI100820R
D702		4822 130 11674	SLR56VCT130	*HI100820R
D703		4822 130 11674	SLR56VCT130	*HI100820R
D704		4822 130 11674	SLR56VCT130	*HI100820R
D705		4822 130 11674	SLR56VCT130	*HI100820R
D706		4822 130 11674	SLR56VCT130	*HI100820R
D707		4822 130 11674	SLR56VCT130	*HI100820R
D708		4822 130 11674	SLR56VCT130	*HI100820R
			INTEGRATED CIRCUITS	
IC01		4822 209 17558	TMP87PM78F	*HU100330R
IC02		4822 209 17453	BFU1923F	*HC104810R
IC73		5322 209 13406	NJM2068MD-TE1	*HC104840R
IC74		5322 209 13406	NJM2068MD-TE1	*HC104840R
			COIL	
L701		nsp	COIL 10µH,K	nsp
			TRANSISTORS	
Q701		4822 130 62787	DTA114YS	*HT300480R
Q702		4822 130 62787	DTA114YS	*HT300480R
Q703		4822 130 62503	DTC114YS	*BA000730R
Q704		4822 130 62503	DTC114YS	*BA000730R
Q705		4822 130 62503	DTC114YS	*BA000730R
Q706		4822 130 11611	KSA1175Y	*HT100390R
Q707		4822 130 11609	KSC2785Y	*HT300590R
Q708		4822 130 62787	DTA114YS	*HT300480R
Q709		4822 130 11613	KSB811Y	*HT200340R
Q710		4822 130 62503	DTC114YS	*BA000730R
Q711		4822 130 62787	DTA114YS	*HT300480R
Q712		4822 130 62503	DTC114YS	*BA000730R
Q713		4822 130 62787	DTA114YS	*HT300480R
Q714		4822 130 62503	DTC114YS	*BA000730R
Q715		4822 130 62503	DTC114YS	*BA000730R
Q716		4822 130 62503	DTC114YS	*BA000730R
Q717		4822 130 62503	DTC114YS	*BA000730R
Q718		4822 130 62503	DTC114YS	*BA000730R
Q719		4822 130 62787	DTA114YS	*HT300480R
Q722		4822 130 11609	KSC2785Y	*HT300590R
Q723		4822 130 11609	KSC2785Y	*HT300590R
			RESISTORS	
R701		nsp	1kΩ 1/5W J	nsp
R702		nsp	1kΩ 1/5W J	nsp
R703		nsp	1kΩ 1/5W J	nsp
R704		nsp	1kΩ 1/5W J	nsp
R705		nsp	10kΩ 1/5W J	nsp
R706		nsp	10kΩ 1/5W J	nsp
R707		nsp	10kΩ 1/5W J	nsp
R708		nsp	220Ω 1/5W J	nsp
R709		nsp	220Ω 1/5W J	nsp
R710		nsp	100Ω 1/5W J	nsp
R711		nsp	100Ω 1/5W J	nsp
R712		nsp	10kΩ 1/4W J	nsp
R713		nsp	10kΩ 1/5W J	nsp
R714		nsp	10kΩ 1/5W J	nsp
R715		nsp	10kΩ 1/5W J	nsp
R716		nsp	10kΩ 1/5W J	nsp

(VERS. :VERSION, U:U.S.A., F:JAPAN, K:FAR EAST, **:EUROPE)

POS. NO	VERS. COLOR	PART NO. (FOR PCS)	DESCRIPTION	PART NO. (MJI)
R717		nsp	100k Ω 1/5W J	nsp
R718		nsp	10k Ω 1/4W J	nsp
R719		nsp	10k Ω 1/4W J	nsp
R720		nsp	10k Ω 1/4W J	nsp
R721		nsp	10k Ω 1/5W J	nsp
R723		nsp	47k Ω 1/5W J	nsp
R724		nsp	10k Ω 1/5W J	nsp
R725		nsp	4.7k Ω 1/5W J	nsp
R726		nsp	820 Ω 1/5W J	nsp
R727		nsp	1k Ω 1/5W J	nsp
R728		nsp	1.5k Ω 1/5W J	nsp
R729		nsp	1.8k Ω 1/5W J	nsp
R730		nsp	2.7k Ω 1/5W J	nsp
R731		nsp	3.3k Ω 1/5W J	nsp
R732		nsp	5.6k Ω 1/5W J	nsp
R733		nsp	7.5k Ω 1/5W J	nsp
R734		nsp	1k Ω 1/5W J	nsp
R735		nsp	1.5k Ω 1/5W J	nsp
R736		nsp	1.8k Ω 1/4W J	nsp
R737		nsp	2.7k Ω 1/5W J	nsp
R738		nsp	3.3k Ω 1/4W J	nsp
R739		nsp	5.6k Ω 1/5W J	nsp
R740		nsp	7.5k Ω 1/4W J	nsp
R741		nsp	1k Ω 1/4W J	nsp
R742		nsp	1.5k Ω 1/5W J	nsp
R743		nsp	1.8k Ω 1/4W J	nsp
R744		nsp	2.7k Ω 1/4W J	nsp
R745		nsp	3.3k Ω 1/4W J	nsp
R746		nsp	5.6k Ω 1/5W J	nsp
R747		nsp	1k Ω 1/5W J	nsp
R748		nsp	1.5k Ω 1/5W J	nsp
R749		nsp	1.8k Ω 1/5W J	nsp
R750		nsp	2.7k Ω 1/5W J	nsp
R751		nsp	3.3k Ω 1/5W J	nsp
R752		nsp	5.6k Ω 1/5W J	nsp
R753		nsp	7.5k Ω 1/5W J	nsp
R755		nsp	22k Ω 1/5W J	nsp
R760		nsp	10k Ω 1/5W J	nsp
R762		nsp	10k Ω 1/5W J	nsp
R763		nsp	10k Ω 1/5W J	nsp
R764		nsp	10k Ω 1/5W J	nsp
R766		nsp	220 Ω 1/5W J	nsp
R767		nsp	220 Ω 1/5W J	nsp
R768		nsp	10k Ω 1/5W J	nsp
R769		nsp	10k Ω 1/5W J	nsp
R770		nsp	10k Ω 1/5W J	nsp
R771		nsp	10k Ω 1/5W J	nsp
R772		nsp	10k Ω 1/5W J	nsp
R773		nsp	470 Ω 1/5W J	nsp
R774		nsp	4.7k Ω 1/5W J	nsp
R801		nsp	22k Ω 1/5W J	nsp
R802		nsp	22k Ω 1/5W J	nsp
R803		nsp	20k Ω 1/5W J	nsp
R804		nsp	20k Ω 1/5W J	nsp
R805		nsp	10k Ω 1/5W J	nsp
R806		nsp	10k Ω 1/5W J	nsp
R809		nsp	10k Ω 1/5W J	nsp
R810		nsp	10k Ω 1/5W J	nsp
R811		nsp	1.5k Ω 1/5W J	nsp
R812		nsp	1.5k Ω 1/5W J	nsp
R813		nsp	1.2k Ω 1/5W J	nsp
R814		nsp	1.2k Ω 1/5W J	nsp
R815		nsp	1.5k Ω 1/5W J	nsp
R816		nsp	1.5k Ω 1/5W J	nsp
R817		nsp	1k Ω 1/5W J	nsp
R818		nsp	1k Ω 1/4W J	nsp
R821		nsp	120 Ω 1/5W J	nsp
R822		nsp	120 Ω 1/4W J	nsp

(VERS. :VERSION, U:U.S.A., F:JAPAN, K:FAR EAST, **:EUROPE)

POS. NO	VERS. COLOR	PART NO. (FOR PCS)	DESCRIPTION	PART NO. (MJI)
R823		nsp	120 Ω 1/5W J	nsp
R824		nsp	120 Ω 1/4W J	nsp
R854		nsp	1k Ω 1/5W J	nsp
R855		nsp	1k Ω 1/5W J	nsp
R856		nsp	47k Ω 1/5W J	nsp
R857		nsp	47k Ω 1/5W J	nsp
R858		nsp	220 Ω 1/5W J	nsp
R859		nsp	220 Ω 1/5W J	nsp
R860		nsp	2.7k Ω 1/5W J	nsp
R861		nsp	2.7k Ω 1/5W J	nsp
R862		nsp	1.2k Ω 1/5W J	nsp
R863		nsp	47k Ω 1/5W J	nsp
R864		nsp	47k Ω 1/5W J	nsp
R865		nsp	1k Ω 1/5W J	nsp
R866		nsp	1k Ω 1/5W J	nsp
R867		nsp	2.7k Ω 1/5W J	nsp
R868		nsp	2.7k Ω 1/5W J	nsp
R869		nsp	10k Ω 1/5W J	nsp
R870		nsp	10k Ω 1/5W J	nsp
R871		nsp	10k Ω 1/5W J	nsp
R872		nsp	10k Ω 1/5W J	nsp
R873		nsp	10k Ω 1/5W J	nsp
R874		nsp	10k Ω 1/5W J	nsp
R875		nsp	270 Ω 1/5W J	nsp
R877		nsp	4.7 Ω 1/5W J	nsp
R878		nsp	1k Ω 1/5W J	nsp
R879		nsp	1k Ω 1/5W J	nsp
R880		nsp	10k Ω 1/5W J	nsp
R890		nsp	4.7 Ω 1/5W J	nsp
R891		nsp	4.7 Ω 1/5W J	nsp
			SWITCHES	
S701		4822 276 13541	TACT SW EVQ21505R	*SP000840R
S702		4822 276 13541	TACT SW EVQ21505R	*SP000840R
S703		4822 276 13541	TACT SW EVQ21505R	*SP000840R
S704		4822 276 13541	TACT SW EVQ21505R	*SP000840R
S705		4822 276 13541	TACT SW EVQ21505R	*SP000840R
S706		4822 276 13541	TACT SW EVQ21505R	*SP000840R
S707		4822 276 13541	TACT SW EVQ21505R	*SP000840R
S708		4822 276 13541	TACT SW EVQ21505R	*SP000840R
S709		4822 276 13541	TACT SW EVQ21505R	*SP000840R
S710		4822 276 13541	TACT SW EVQ21505R	*SP000840R
S711		4822 276 13541	TACT SW EVQ21505R	*SP000840R
S712		4822 276 13541	TACT SW EVQ21505R	*SP000840R
S713		4822 276 13541	TACT SW EVQ21505R	*SP000840R
S714		4822 276 13541	TACT SW EVQ21505R	*SP000840R
S715		4822 276 13541	TACT SW EVQ21505R	*SP000840R
S716		4822 276 13541	TACT SW EVQ21505R	*SP000840R
S717		4822 276 13541	TACT SW EVQ21505R	*SP000840R
S718		4822 276 13541	TACT SW EVQ21505R	*SP000840R
S719		4822 276 13541	TACT SW EVQ21505R	*SP000840R
S720		4822 276 13541	TACT SW EVQ21505R	*SP000840R
S721		4822 276 13541	TACT SW EVQ21505R	*SP000840R
S722		4822 276 13541	TACT SW EVQ21505R	*SP000840R
S723		4822 276 13541	TACT SW EVQ21505R	*SP000840R
S724		4822 276 13541	TACT SW EVQ21505R	*SP000840R
S725		4822 276 13541	TACT SW EVQ21505R	*SP000840R
S726		4822 276 13541	TACT SW EVQ21505R	*SP000840R
S727		4822 276 13541	TACT SW EVQ21505R	*SP000840R
S728		4822 276 13541	TACT SW EVQ21505R	*SP000840R
S729		4822 276 13541	TACT SW EVQ21505R	*SP000840R
S730		4822 276 13541	TACT SW EVQ21505R	*SP000840R
S731		4822 276 13541	TACT SW EVQ21505R	*SP000840R
SW72		4822 276 14103	SW PUSH SPUL19XIM071	*SP000860R
⚠ SW73		4822 276 14105	SW PUSH (MOMS)	*SP000850R

(VERS. :VERSION, U:U.S.A., F:JAPAN, K:FAR EAST, **:EUROPE)

POS. NO	VERS. COLOR	PART NO. (FOR PCS)	DESCRIPTION	PART NO. (MJI)
			MISCELLANEOUS	
FIP1		4822 135 00293	FLD SVA-10MS11 SVA-10MS11	*HQ300360R
IC72		4822 130 11675	IR SENSOR ICC-2110-0272	*HW100450R
JK71		4822 265 11593	JACK VCR JC010077YG	*YT001540R
JK72		4822 265 11594	JACK VCR JC010077RG	*YT001530R
JK73		4822 265 11595	JACK VCR JC010077WG	*YT001520R
JK74		4822 265 11649	JACK HEADPHONE HTJ064-11DG	*YT001610R
VR71		4822 101 11968	VOL. RK16K1280001	*RA000910R
VR72		4822 101 11968	VOL. RK16K1280001	*RA000910R
VR73		4822 101 11972	VOL. 100K-SW	*RA000890R
VR74		4822 273 10376	VR ENCODER FK124B	*SR000110R
X701		4822 242 10855	CRYSTAL	*JX000410R
X702		4822 242 11059	CRYSTAL	*JX000580R
			POWER CIRCUIT BOARD	
			CAPACITORS	
C420		nsp	CER. DE7150-610F472M	nsp
C421		nsp	CER. DE7150-610F472M	nsp
C901		nsp	MYLAR 0.047μF 50V J	nsp
C902		nsp	MYLAR 0.047μF 50V J	nsp
C903		nsp	MYLAR 0.047μF 50V J	nsp
C904		nsp	MYLAR 0.047μF 50V J	nsp
C905		nsp	MYLAR 0.047μF 50V J	nsp
C906		nsp	MYLAR 0.047μF 50V J	nsp
C907		nsp	MYLAR 0.047μF 50V J	nsp
C908		nsp	ELECT 4.7μF 50V	nsp
			DIODE	
D908		4822 130 83142	ZENER 6.2V 1/2W	HD30621000
			FUSES	
F905		nsp	HOLDER FUSE	nsp
F907		nsp	HOLDER FUSE	nsp
			RESISTORS	
⚠ R901		4822 117 13673	0.47 Ω FUSE	*NH000090R
⚠ R902		4822 117 13673	0.47 Ω FUSE	*NH000090R
R903		nsp	2.2 Ω 1/4W J	nsp
R904		nsp	2.2 Ω 1/4W J	nsp
R908		nsp	10 Ω 1/5W J	nsp
			MISCELLANEOUS	
⚠ OL91		4822 265 11604	OUTLET EUR (1P) S2-770-200	*YT001490R
PWR2		4822 146 11196	TRANS.SUB.230V	*TS001030R
⚠ RY92		4822 280 10387	RELAY HR-CR7-DC12V	*LY000190R
			MAIN CIRCUIT BOARD	
			CAPACITORS	
C501		nsp	ELECT 4.7μF 50V	nsp
C502		nsp	ELECT 4.7μF 50V	nsp
C503		nsp	CER. 470pF 50V K	nsp
C504		nsp	CER. 470pF 50V K	nsp
C505		nsp	ELECT 10μF 50V	nsp
C506		nsp	ELECT 10μF 50V	nsp
C507		nsp	MYLAR 2200pF 50V J	nsp
C508		nsp	MYLAR 2200pF 50V J	nsp
C509		nsp	ELECT 10μF 50V	nsp
C510		nsp	ELECT 10μF 50V	nsp
C513		nsp	CER. 27pF 50V J	nsp
C514		nsp	CER. 27pF 50V J	nsp
C519		nsp	ELECT 100μF 16V	nsp
C520		nsp	ELECT 100μF 16V	nsp
C523		nsp	CER. 27pF 50V J	nsp
C524		nsp	CER. 27pF 50V J	nsp
C529		nsp	CER. 1000pF 50V K	nsp
C530		nsp	CER. 1000pF 50V K	nsp

(VERS. :VERSION, U:U.S.A., F:JAPAN, K:FAR EAST, **:EUROPE)

POS. NO	VERS. COLOR	PART NO. (FOR PCS)	DESCRIPTION	PART NO. (MJI)
C531		nsp	CER. 220pF 50V K	nsp
C532		nsp	CER. 220pF 50V K	nsp
C533		nsp	CER. 220pF 50V K	nsp
C534		nsp	CER. 220pF 50V K	nsp
C535		nsp	MYLAR 0.047μF 50V J	nsp
C536		nsp	MYLAR 0.047μF 50V J	nsp
C543		nsp	MYLAR 0.047μF 50V J	nsp
C544		nsp	MYLAR 0.047μF 50V J	nsp
C545		nsp	ELECT 4.7μF 50V	nsp
C546		nsp	ELECT 4.7μF 50V	nsp
C568		nsp	ELECT 1.0μF 50V	nsp
C569		nsp	ELECT 0.1μF 50V	nsp
C571		nsp	ELECT 10μF 50V	nsp
C591		nsp	CER. 100pF 50V K	nsp
C592		nsp	CER. 100pF 50V K	nsp
C593		nsp	CER. 100pF 50V K	nsp
C594		nsp	CER. 100pF 50V K	nsp
C595		nsp	CER. 100pF 50V K	nsp
C596		nsp	CER. 100pF 50V K	nsp
C601		nsp	ELECT 4.7μF 50V	nsp
C602		nsp	ELECT 4.7μF 50V	nsp
C603		nsp	ELECT 4.7μF 50V	nsp
C604		nsp	CER. 470pF 50V K	nsp
C605		nsp	CER. 470pF 50V K	nsp
C606		nsp	CER. 470pF 50V K	nsp
C610		nsp	MYLAR 2200pF 50V J	nsp
C611		nsp	MYLAR 2200pF 50V J	nsp
C612		nsp	MYLAR 2200pF 50V J	nsp
C619		nsp	CER. 27pF 50V J	nsp
C620		nsp	CER. 27pF 50V J	nsp
C621		nsp	CER. 27pF 50V J	nsp
C625		nsp	ELECT 10μF 50V	nsp
C626		nsp	ELECT 10μF 50V	nsp
C627		nsp	ELECT 10μF 50V	nsp
C628		nsp	ELECT 100μF 16V	nsp
C629		nsp	ELECT 100μF 16V	nsp
C630		nsp	ELECT 100μF 16V	nsp
C631		nsp	ELECT 10μF 50V	nsp
C632		nsp	ELECT 10μF 50V	nsp
C633		nsp	ELECT 10μF 50V	nsp
C634		nsp	CER. 27pF 50V J	nsp
C635		nsp	CER. 27pF 50V J	nsp
C636		nsp	CER. 27pF 50V J	nsp
C643		nsp	CER. 1000pF 50V K	nsp
C644		nsp	CER. 1000pF 50V K	nsp
C645		nsp	CER. 1000pF 50V K	nsp
C646		nsp	CER. 220pF 50V K	nsp
C647		nsp	CER. 220pF 50V K	nsp
C648		nsp	CER. 220pF 50V K	nsp
C649		nsp	CER. 220pF 50V K	nsp
C650		nsp	CER. 220pF 50V K	nsp
C651		nsp	CER. 220pF 50V K	nsp
C652		nsp	MYLAR 0.047μF 50V J	nsp
C653		nsp	MYLAR 0.047μF 50V J	nsp
C654		nsp	MYLAR 0.047μF 50V J	nsp
C664		nsp	MYLAR 0.047μF 50V J	nsp
C665		nsp	MYLAR 0.047μF 50V J	nsp
C666		nsp	MYLAR 0.047μF 50V J	nsp
C667		nsp	ELECT 4.7μF 50V	nsp
C668		nsp	ELECT 4.7μF 50V	nsp
C669		nsp	ELECT 4.7μF 50V	nsp
C911		4822 124 12444	ELECT 10000μF 63V	*EA000920R
C912		4822 124 12444	ELECT 10000μF 63V	*EA000920R
C915		4822 124 41458	ELECT 4700μF 16V	OA47801626
C922		4822 124 41289	ELECT 470μF 25V	EA47702510
C921		nsp	CER. 0.01μF 50V Z	nsp
C923		nsp	ELECT 100μF 16V	nsp
C924		nsp	CER. 0.01μF 50V Z	nsp

(VERS. :VERSION, U:U.S.A., F:JAPAN, K:FAR EAST, **:EUROPE)

POS. NO	VERS. COLOR	PART NO. (FOR PCS)	DESCRIPTION	PART NO. (MJI)
C925		nsp	ELECT 100µF 16V	nsp
C931		nsp	ELECT 47µF 50V	nsp
C932		nsp	CER. 0.01µF 50V Z	nsp
C933		nsp	ELECT 100µF 50V	nsp
C934		nsp	CER. 0.01µF 50V Z	nsp
C935		nsp	ELECT 47µF 50V	nsp
C936		nsp	ELECT 47µF 50V	nsp
C937		nsp	CER. 0.01µF 50V Z	nsp
C938		nsp	ELECT 100µF 16V	nsp
C939		nsp	CER. 0.01µF 50V Z	nsp
C941		4822 124 12414	ELECT 2200µF 35V	*EA000850R
C942		4822 124 12414	ELECT 2200µF 35V	*EA000850R
C943		4822 124 22723	ELECT 1000µF 25V	OA10802526
C945		nsp	ELECT 100µF 35V	nsp
C946		nsp	ELECT 100µF 35V	nsp
C947		nsp	CER. 0.01µF 50V Z	nsp
C948		nsp	CER. 0.01µF 50V Z	nsp
C949		nsp	ELECT 100µF 16V	nsp
C951		nsp	ELECT 100µF 16V	nsp
C953		nsp	CER. 0.01µF 50V Z	nsp
C956		4822 124 40723	ELECT 2200µF 16V	OA22801626
C961		nsp	CER. 0.1µF 50V Z	nsp
C966		nsp	ELECT 100µF 16V	nsp
C969		nsp	CER. 470pF 50V K	nsp
C970		nsp	MYLAR 5600pF 50V J	nsp
C971		nsp	ELECT 220µF 50V	nsp
C972		nsp	ELECT 47µF 25V	nsp
C985		nsp	ELECT 47µF 25V	nsp
C988		nsp	ELECT 47µF 25V	nsp
C991		nsp	MYLAR 0.022µF 50V J	nsp
C992		nsp	MYLAR 0.022µF 50V J	nsp
C993		nsp	MYLAR 0.022µF 50V J	nsp
C994		nsp	MYLAR 0.022µF 50V J	nsp
C995		nsp	MYLAR 0.022µF 50V J	nsp
			DIODES	
D509		4822 130 10624	ZENER 27V 1/2W	*HD301610R
D510		4822 130 10624	ZENER 27V 1/2W	*HD301610R
D525		4822 130 10624	ZENER 27V 1/2W	*HD301610R
D526		4822 130 10624	ZENER 27V 1/2W	*HD301610R
D527		4822 130 30621	1N4148	QP13030621
D528		4822 130 30621	1N4148	QP13030621
D529		4822 130 30621	1N4148	QP13030621
D530		4822 130 30621	1N4148	QP13030621
D545		4822 130 30621	1N4148	QP13030621
D546		4822 130 30621	1N4148	QP13030621
D547		4822 130 30621	1N4148	QP13030621
D548		4822 130 30621	1N4148	QP13030621
D565		4822 130 30621	1N4148	QP13030621
D566		4822 130 30621	1N4148	QP13030621
D613		4822 130 10624	ZENER 27V 1/2W	*HD301610R
D614		4822 130 10624	ZENER 27V 1/2W	*HD301610R
D615		4822 130 10624	ZENER 27V 1/2W	*HD301610R
D637		4822 130 10624	ZENER 27V 1/2W	*HD301610R
D638		4822 130 10624	ZENER 27V 1/2W	*HD301610R
D639		4822 130 10624	ZENER 27V 1/2W	*HD301610R
D640		4822 130 30621	1N4148	QP13030621
D641		4822 130 30621	1N4148	QP13030621
D642		4822 130 30621	1N4148	QP13030621
D643		4822 130 30621	1N4148	QP13030621
D644		4822 130 30621	1N4148	QP13030621
D645		4822 130 30621	1N4148	QP13030621
D667		4822 130 30621	1N4148	QP13030621
D668		4822 130 30621	1N4148	QP13030621
D669		4822 130 30621	1N4148	QP13030621
D670		4822 130 30621	1N4148	QP13030621
D671		4822 130 30621	1N4148	QP13030621
D672		4822 130 30621	1N4148	QP13030621
▲ D904		4822 130 11678	BRIDGE W02GF	*HE200230R

(VERS. :VERSION, U:U.S.A., F:JAPAN, K:FAR EAST, **:EUROPE)

POS. NO	VERS. COLOR	PART NO. (FOR PCS)	DESCRIPTION	PART NO. (MJI)
D915		4822 130 31878	1N4003	HD200010AR
D923		4822 130 11629	ZENER 6.8V 1/2W	*HD301620R
D924		4822 130 30621	1N4148	QP13030621
D931		4822 130 31878	1N4003	HD200010AR
D932		4822 130 31878	1N4003	HD200010AR
D935		4822 130 11676	ZENER 30V 1/2W	*HD301670R
D941		4822 130 31878	1N4003	HD200010AR
D942		4822 130 31878	1N4003	HD200010AR
D943		4822 130 31878	1N4003	HD200010AR
D944		4822 130 31878	1N4003	HD200010AR
D949		4822 130 33948	ZENER 5.6V 1/2W	HD30561000
D951		4822 130 80623	ZENER 13V 1/2W	HD31301000
D952		4822 130 30621	1N4148	QP13030621
D972		4822 130 30621	1N4148	QP13030621
D975		4822 130 30621	1N4148	QP13030621
D977		4822 130 30621	1N4148	QP13030621
D978		4822 130 30621	1N4148	QP13030621
D984		4822 130 30621	1N4148	QP13030621
D985		4822 130 30621	1N4148	QP13030621
D995		4822 130 30621	1N4148	QP13030621
D996		4822 130 31878	1N4003	HD200010AR
D997		4822 130 30621	1N4148	QP13030621
			INTEGRATED CIRCUITS	
IC95		4822 209 91033	KA7815-ABTU	*HC300220R
IC96		5322 209 86361	KA7915-ABTU	*HC300230R
IC97		4822 209 90086	KA7805-ABTU	*HC300210R
IC98		9965 000 00193	KA7905-ABTU	*HC104970R
			TRANSISTORS	
Q503		4822 130 11616	KTC3200GR	*HT300610R
Q504		4822 130 11616	KTC3200GR	*HT300610R
Q505		4822 130 11616	KTC3200GR	*HT300610R
Q506		4822 130 11616	KTC3200GR	*HT300610R
Q513		4822 130 11616	KTC3200GR	*HT300610R
Q514		4822 130 11616	KTC3200GR	*HT300610R
Q515		4822 130 11616	KTC3200GR	*HT300610R
Q516		4822 130 11616	KTC3200GR	*HT300610R
Q523		4822 130 11682	KSA910Y	*HT100450R
Q524		4822 130 11682	KSA910Y	*HT100450R
Q525		5322 130 63836	KSC2310Y	*HT300670R
Q526		5322 130 63836	KSC2310Y	*HT300670R
Q529		4822 130 60117	2SC3419Y	HT334191Y0
Q530		4822 130 60117	2SC3419Y	HT334191Y0
Q531		4822 130 11618	2SC4883A	*HT300570R
Q532		4822 130 11618	2SC4883A	*HT300570R
Q533		4822 130 11619	2SA1859A	*HT100380R
Q534		4822 130 11619	2SA1859A	*HT100380R
Q537		4822 130 63433	2SC4467	HT344673A0
Q538		4822 130 63433	2SC4467	HT344673A0
Q539		4822 130 63367	2SA1694	HT116943A0
Q540		4822 130 63367	2SA1694	HT116943A0
Q545		4822 130 11609	KSC2785Y	*HT300590R
Q546		4822 130 11609	KSC2785Y	*HT300590R
Q561		4822 130 42594	DTC144ES	BA20012200
Q562		4822 130 42682	DTA144ES	BA10010210
Q563		4822 130 11683	KSA916Y	*HT100460R
Q564		4822 130 42682	DTA144ES	BA10010210
Q565		4822 130 11609	KSC2785Y	*HT300590R
Q566		4822 130 42594	DTC144ES	BA20012200
Q567		4822 130 42594	DTC144ES	BA20012200
Q583		5322 130 60898	KTC2878B	*HT300600R
Q584		5322 130 60898	KTC2878B	*HT300600R
Q585		4822 130 42682	DTA144ES	BA10010210
Q591		5322 130 60898	KTC2878B	*HT300600R
Q592		5322 130 60898	KTC2878B	*HT300600R
Q593		5322 130 60898	KTC2878B	*HT300600R
Q594		5322 130 60898	KTC2878B	*HT300600R
Q595		5322 130 60898	KTC2878B	*HT300600R

(VERS. :VERSION, U:U.S.A., F:JAPAN, K:FAR EAST, **:EUROPE)

POS. NO	VERS. COLOR	PART NO. (FOR PCS)	DESCRIPTION	PART NO. (MJI)
Q596		5322 130 60898	KTC2878B	*HT300600R
Q598		5322 130 60898	KTC2878B	*HT300600R
Q604		4822 130 11616	KTC3200GR	*HT300610R
Q605		4822 130 11616	KTC3200GR	*HT300610R
Q606		4822 130 11616	KTC3200GR	*HT300610R
Q607		4822 130 11616	KTC3200GR	*HT300610R
Q608		4822 130 11616	KTC3200GR	*HT300610R
Q609		4822 130 11616	KTC3200GR	*HT300610R
Q619		4822 130 11616	KTC3200GR	*HT300610R
Q620		4822 130 11616	KTC3200GR	*HT300610R
Q621		4822 130 11616	KTC3200GR	*HT300610R
Q622		4822 130 11616	KTC3200GR	*HT300610R
Q623		4822 130 11616	KTC3200GR	*HT300610R
Q624		4822 130 11616	KTC3200GR	*HT300610R
Q634		4822 130 11682	KSA910Y	*HT100450R
Q635		4822 130 11682	KSA910Y	*HT100450R
Q636		4822 130 11682	KSA910Y	*HT100450R
Q637		5322 130 63836	KSC2310Y	*HT300670R
Q638		5322 130 63836	KSC2310Y	*HT300670R
Q639		5322 130 63836	KSC2310Y	*HT300670R
Q643		4822 130 60117	2SC3419Y	HT334191Y0
Q644		4822 130 60117	2SC3419Y	HT334191Y0
Q645		4822 130 60117	2SC3419Y	HT334191Y0
Q646		4822 130 11618	2SC4883A	*HT300570R
Q647		4822 130 11618	2SC4883A	*HT300570R
Q648		4822 130 11618	2SC4883A	*HT300570R
Q649		4822 130 11619	2SA1859A	*HT100380R
Q650		4822 130 11619	2SA1859A	*HT100380R
Q651		4822 130 11619	2SA1859A	*HT100380R
Q655		4822 130 63433	2SC4467	HT344673A0
Q656		4822 130 63433	2SC4467	HT344673A0
Q657		4822 130 63433	2SC4467	HT344673A0
Q658		4822 130 63367	2SA1694	HT116943A0
Q659		4822 130 63367	2SA1694	HT116943A0
Q660		4822 130 63367	2SA1694	HT116943A0
Q667		4822 130 11609	KSC2785Y	*HT300590R
Q668		4822 130 11609	KSC2785Y	*HT300590R
Q669		4822 130 11609	KSC2785Y	*HT300590R
Q697		5322 130 60898	KTC2878B	*HT300600R
Q698		5322 130 60898	KTC2878B	*HT300600R
Q923		4822 130 11617	KSC2316Y	*HT300580R
Q925		4822 130 11609	KSC2785Y	*HT300590R
Q935		4822 130 11621	KTA1271Y	*BA000760R
Q949		4822 130 11617	KSC2316Y	*HT300580R
Q967		4822 130 11609	KSC2785Y	*HT300590R
Q968		4822 130 11609	KSC2785Y	*HT300590R
Q969		4822 130 42682	DTA144ES	BA10010210
Q970		4822 130 11611	KSA1175Y	*HT100390R
Q975		4822 130 42682	DTA144ES	BA10010210
Q976		4822 130 42594	DTC144ES	BA20012200
Q977		4822 130 42594	DTC144ES	BA20012200
Q978		4822 130 42594	DTC144ES	BA20012200
Q979		4822 130 10803	KTD2058Y	*HT400410R
Q984		4822 130 11609	KSC2785Y	*HT300590R
Q985		4822 130 11609	KSC2785Y	*HT300590R
Q986		4822 130 42682	DTA144ES	BA10010210
Q987		4822 130 11621	KTA1271Y	*BA000760R
Q991		4822 130 42682	DTA144ES	BA10010210
Q994		4822 130 42594	DTC144ES	BA20012200
			RESISTORS	
R501		nsp	47k Ω 1/5W J	nsp
R502		nsp	47k Ω 1/5W J	nsp
R503		nsp	3.3k Ω 1/5W J	nsp
R504		nsp	3.3k Ω 1/5W J	nsp
R505		nsp	3.3k Ω 1/5W J	nsp
R506		nsp	3.3k Ω 1/5W J	nsp
R507		nsp	100 Ω 1/5W J	nsp

(VERS. :VERSION, U:U.S.A., F:JAPAN, K:FAR EAST, **:EUROPE)

POS. NO	VERS. COLOR	PART NO. (FOR PCS)	DESCRIPTION	PART NO. (MJI)
R508		nsp	100 Ω 1/5W J	nsp
R509		4822 053 10272	2.7k Ω 1W J METAL	GA05272010
R510		4822 053 10272	2.7k Ω 1W J METAL	GA05272010
R511		nsp	47k Ω 1/4W J	nsp
R512		nsp	47k Ω 1/4W J	nsp
R513		nsp	560 Ω 1/5W J	nsp
R514		nsp	560 Ω 1/5W J	nsp
R515		nsp	560 Ω 1/5W J	nsp
R516		nsp	560 Ω 1/5W J	nsp
R517		nsp	5.1k Ω 1/5W J	nsp
R518		nsp	5.1k Ω 1/5W J	nsp
R519		nsp	3.3k Ω 1/5W J	nsp
R520		nsp	3.3k Ω 1/5W J	nsp
R521		nsp	47k Ω 1/5W J	nsp
R522		nsp	47k Ω 1/5W J	nsp
R523		nsp	100 Ω 1/5W J	nsp
R524		nsp	100 Ω 1/5W J	nsp
R525		nsp	5.1k Ω 1/5W J	nsp
R526		nsp	5.1k Ω 1/5W J	nsp
R527		nsp	100 Ω 1/5W J	nsp
R528		nsp	100 Ω 1/5W J	nsp
R529		nsp	1.2k Ω 1/5W J	nsp
R530		nsp	1.2k Ω 1/5W J	nsp
R531		nsp	680 Ω 1/5W J	nsp
R532		nsp	680 Ω 1/5W J	nsp
R533		nsp	1.8k Ω 1/5W J	nsp
R534		nsp	1.8k Ω 1/5W J	nsp
⚠ R535		4822 113 90141	220 Ω 1/5W J FUSE	NF02221140
⚠ R536		4822 113 90141	220 Ω 1/5W J FUSE	NF02221140
R537		4822 117 13674	0.22 Ω 5W K CEMENT	*GO000007R
R538		4822 117 13674	0.22 Ω 5W K CEMENT	*GO000007R
R539		4822 117 13674	0.22 Ω 5W K CEMENT	*GO000007R
R540		4822 117 13674	0.22 Ω 5W K CEMENT	*GO000007R
R541		4822 053 10109	10 Ω 1W J METAL	GA05100010
R542		4822 053 10109	10 Ω 1W J METAL	GA05100010
R543		4822 053 10109	10 Ω 1W J METAL	GA05100010
R544		4822 053 10109	10 Ω 1W J METAL	GA05100010
R545		nsp	2.2k Ω 1/5W J	nsp
R546		nsp	2.2k Ω 1/5W J	nsp
R547		nsp	15k Ω 1/5W J	nsp
R548		nsp	15k Ω 1/5W J	nsp
R549		nsp	12k Ω 1/5W J	nsp
R550		nsp	12k Ω 1/5W J	nsp
R551		nsp	3.3k Ω 1/5W J	nsp
R552		nsp	3.3k Ω 1/5W J	nsp
R553		nsp	1.8k Ω 1/5W J	nsp
R554		nsp	1.8k Ω 1/5W J	nsp
R555		nsp	1.8k Ω 1/5W J	nsp
R556		nsp	10k Ω 1/5W J	nsp
R557		nsp	560 Ω 1/5W J	nsp
R558		nsp	560 Ω 1/5W J	nsp
R561		nsp	100 Ω 1/5W J	nsp
R563		4822 053 10391	390 Ω 1W J METAL	GA05391010
R564		4822 053 10391	390 Ω 1W J METAL	GA05391010
R565		nsp	1k Ω 1/5W J	nsp
R566		nsp	10k Ω 1/5W J	nsp
R567		nsp	47k Ω 1/5W J	nsp
R568		nsp	22k Ω 1/5W J	nsp
R569		nsp	10k Ω 1/5W J	nsp
R571		nsp	68k Ω 1/5W J	nsp
R572		nsp	68k Ω 1/5W J	nsp
R573		nsp	68k Ω 1/5W J	nsp
R574		nsp	68k Ω 1/5W J	nsp
R575		nsp	1k Ω 1/5W J	nsp
R576		nsp	1k Ω 1/5W J	nsp
R577		nsp	100k Ω 1/5W J	nsp
R578		nsp	100k Ω 1/5W J	nsp
R579		nsp	68k Ω 1/5W J	nsp

(VERS. :VERSION, U:U.S.A., F:JAPAN, K:FAR EAST, **:EUROPE)

POS. NO	VERS. COLOR	PART NO. (FOR PCS)	DESCRIPTION	PART NO. (MJI)
R580		nsp	4.7k Ω 1/5W J	nsp
R583		nsp	3.3k Ω 1/5W J	nsp
R584		nsp	3.3k Ω 1/5W J	nsp
R591		nsp	6.8k Ω 1/5W J	nsp
R592		nsp	6.8k Ω 1/5W J	nsp
R593		nsp	1k Ω 1/5W J	nsp
R594		nsp	100k Ω 1/5W J	nsp
R598		nsp	3.3k Ω 1/5W J	nsp
R601		nsp	47k Ω 1/5W J	nsp
R602		nsp	47k Ω 1/5W J	nsp
R603		nsp	47k Ω 1/5W J	nsp
R604		nsp	3.3k Ω 1/5W J	nsp
R605		nsp	3.3k Ω 1/5W J	nsp
R606		nsp	3.3k Ω 1/5W J	nsp
R607		nsp	3.3k Ω 1/5W J	nsp
R608		nsp	3.3k Ω 1/5W J	nsp
R609		nsp	3.3k Ω 1/5W J	nsp
R610		nsp	100 Ω 1/5W J	nsp
R611		nsp	100 Ω 1/5W J	nsp
R612		nsp	100 Ω 1/5W J	nsp
R613		4822 053 10272	2.7k Ω 1W J METAL	GA05272010
R614		4822 053 10272	2.7k Ω 1W J METAL	GA05272010
R615		4822 053 10272	2.7k Ω 1W J METAL	GA05272010
R616		nsp	47k Ω 1/4W J	nsp
R617		nsp	47k Ω 1/4W J	nsp
R618		nsp	47k Ω 1/4W J	nsp
R619		nsp	560 Ω 1/5W J	nsp
R620		nsp	560 Ω 1/5W J	nsp
R621		nsp	560 Ω 1/5W J	nsp
R622		nsp	560 Ω 1/5W J	nsp
R623		nsp	560 Ω 1/5W J	nsp
R624		nsp	560 Ω 1/5W J	nsp
R625		nsp	5.1k Ω 1/5W J	nsp
R626		nsp	5.1k Ω 1/5W J	nsp
R627		nsp	5.1k Ω 1/5W J	nsp
R628		nsp	3.9k Ω 1/5W J	nsp
R629		nsp	3.9k Ω 1/5W J	nsp
R630		nsp	3.9k Ω 1/5W J	nsp
R631		nsp	47k Ω 1/5W J	nsp
R632		nsp	47k Ω 1/5W J	nsp
R633		nsp	47k Ω 1/5W J	nsp
R634		nsp	100 Ω 1/5W J	nsp
R635		nsp	100 Ω 1/5W J	nsp
R636		nsp	100 Ω 1/5W J	nsp
R637		nsp	5.1k Ω 1/5W J	nsp
R638		nsp	5.1k Ω 1/5W J	nsp
R639		nsp	5.1k Ω 1/5W J	nsp
R640		nsp	100 Ω 1/5W J	nsp
R641		nsp	100 Ω 1/5W J	nsp
R642		nsp	100 Ω 1/5W J	nsp
R643		nsp	1.2k Ω 1/5W J	nsp
R644		nsp	1.2k Ω 1/5W J	nsp
R645		nsp	1.2k Ω 1/5W J	nsp
R646		nsp	680 Ω 1/5W J	nsp
R647		nsp	680 Ω 1/5W J	nsp
R648		nsp	680 Ω 1/5W J	nsp
R649		nsp	1.8k Ω 1/5W J	nsp
R650		nsp	1.8k Ω 1/5W J	nsp
R651		nsp	1.8k Ω 1/5W J	nsp
⚠ R652		4822 113 90141	220 Ω 1/5W J FUSE	NF02221140
⚠ R653		4822 113 90141	220 Ω 1/5W J FUSE	NF02221140
⚠ R654		4822 113 90141	220 Ω 1/5W J FUSE	NF02221140
R655		4822 117 13674	0.22 Ω 5W K CEMENT	*GO000007R
R656		4822 117 13674	0.22 Ω 5W K CEMENT	*GO000007R
R657		4822 117 13674	0.22 Ω 5W K CEMENT	*GO000007R
R658		4822 117 13674	0.22 Ω 5W K CEMENT	*GO000007R
R659		4822 117 13674	0.22 Ω 5W K CEMENT	*GO000007R
R660		4822 117 13674	0.22 Ω 5W K CEMENT	*GO000007R

(VERS. :VERSION, U:U.S.A., F:JAPAN, K:FAR EAST, **:EUROPE)

POS. NO	VERS. COLOR	PART NO. (FOR PCS)	DESCRIPTION	PART NO. (MJI)
R661		4822 053 10109	10 Ω 1W J METAL	GA05100010
R662		4822 053 10109	10 Ω 1W J METAL	GA05100010
R663		4822 053 10109	10 Ω 1W J METAL	GA05100010
R664		4822 053 10109	10 Ω 1W J METAL	GA05100010
R665		4822 053 10109	10 Ω 1W J METAL	GA05100010
R666		4822 053 10109	10 Ω 1W J METAL	GA05100010
R667		nsp	2.2k Ω 1/5W J	nsp
R668		nsp	2.2k Ω 1/5W J	nsp
R669		nsp	2.2k Ω 1/5W J	nsp
R670		nsp	15k Ω 1/5W J	nsp
R671		nsp	15k Ω 1/5W J	nsp
R672		nsp	15k Ω 1/5W J	nsp
R673		nsp	12k Ω 1/5W J	nsp
R674		nsp	12k Ω 1/5W J	nsp
R675		nsp	12k Ω 1/5W J	nsp
R676		4822 053 10101	100 Ω 1W J METAL	GA05101010
R677		nsp	560 Ω 1/5W J	nsp
R678		nsp	560 Ω 1/5W J	nsp
R679		nsp	560 Ω 1/5W J	nsp
R685		nsp	6.8k Ω 1/5W J	nsp
R686		nsp	6.8k Ω 1/5W J	nsp
R687		nsp	6.8k Ω 1/5W J	nsp
R689		nsp	1k Ω 1/5W J	nsp
R690		nsp	1k Ω 1/5W J	nsp
R691		nsp	100k Ω 1/5W J	nsp
R692		nsp	100k Ω 1/5W J	nsp
R693		nsp	1M Ω 1/5W J	nsp
R697		nsp	3.3k Ω 1/5W J	nsp
R698		nsp	3.3k Ω 1/5W J	nsp
⚠ R905		4822 117 13653	0.47 Ω 1W J FUSE	*NH000080R
R911		nsp	39k Ω 1/4W J	nsp
R912		nsp	39k Ω 1/4W J	nsp
R913		nsp	39k Ω 1/4W J	nsp
R914		nsp	39k Ω 1/4W J	nsp
R920		nsp	560 Ω 1/5W J	nsp
R921		4822 053 10272	2.7k Ω 1W J METAL	GA05272010
R922		nsp	820 Ω 1/5W J	nsp
R924		nsp	15k Ω 1/5W J	nsp
R925		nsp	47k Ω 1/5W J	nsp
R926		nsp	1k Ω 1/5W J	nsp
R927		nsp	1k Ω 1/5W J	nsp
R928		nsp	1k Ω 1/5W J	nsp
R929		nsp	1k Ω 1/5W J	nsp
R930		nsp	1k Ω 1/5W J	nsp
R931		nsp	1k Ω 1/5W J	nsp
R932		nsp	3.3k Ω 1/5W J	nsp
R933		nsp	3.3k Ω 1/5W J	nsp
R934		nsp	3.3k Ω 1/5W J	nsp
R935		nsp	1.2k Ω 1/5W J	nsp
R937		nsp	47k Ω 1/5W J	nsp
R941		nsp	15k Ω 1/5W J	nsp
R942		nsp	15k Ω 1/5W J	nsp
R943		nsp	3.3k Ω 1/5W J	nsp
R944		nsp	3.3k Ω 1/5W J	nsp
R945		nsp	3.3k Ω 1/5W J	nsp
R949		nsp	1.2k Ω 1/5W J	nsp
R951		nsp	1k Ω 1/4W J	nsp
R952		nsp	12k Ω 1/5W J	nsp
R961		nsp	68k Ω 1/5W J	nsp
R962		nsp	68k Ω 1/5W J	nsp
R963		nsp	68k Ω 1/5W J	nsp
R964		nsp	68k Ω 1/5W J	nsp
R965		nsp	68k Ω 1/5W J	nsp
R966		nsp	1k Ω 1/5W J	nsp
R968		nsp	100 Ω 1/5W J	nsp
R969		nsp	10k Ω 1/5W J	nsp
R970		nsp	4.7k Ω 1/5W J	nsp
R971		nsp	1k Ω 1/5W J	nsp

(VERS. :VERSION, U:U.S.A., F:JAPAN, K:FAR EAST, **:EUROPE)

POS. NO	VERS. COLOR	PART NO. (FOR PCS)	DESCRIPTION	PART NO. (MJI)
R977		nsp	100 Ω 1/5W J	nsp
R978		nsp	100 Ω 1/5W J	nsp
R981		nsp	390 Ω 1/5W J	nsp
R982		nsp	180 Ω 1/5W J	nsp
R983		nsp	100k Ω 1/5W J	nsp
R984		nsp	4.7k Ω 1/5W J	nsp
R985		nsp	47k Ω 1/5W J	nsp
R986		nsp	1.8k Ω 1/5W J	nsp
R987		nsp	3.3k Ω 1/5W J	nsp
R988		nsp	10 Ω 1/5W J	nsp
R989		nsp	10k Ω 1/5W J	nsp
R994		nsp	100 Ω 1/5W J	nsp
			MISCELLANEOUS	
ET01		nsp	PLATE EARTH	nsp
ET02		nsp	BRACKET PCB	nsp
JK92		4822 265 11647	JACK BOARD JS060046KN	*YT001720R
L541		4822 157 11872	COIL 0.5μH K	*LC107210R
L542		4822 157 11872	COIL 0.5μH K	*LC107210R
L661		4822 157 11872	COIL 0.5μH K	*LC107210R
L662		4822 157 11872	COIL 0.5μH K	*LC107210R
L663		4822 157 11872	COIL 0.5μH K	*LC107210R
L901		4822 157 11901	COIL 12μH K	*LC107230R
L902		4822 157 11901	COIL 12μH K	*LC107230R
▲ RY41		4822 280 60592	RELAY G5Z-2A-DC12V	*LY000220R
▲ RY51		4822 280 10386	RELAY OSA-SS-212DM3	*LY000180R
▲ RY61		4822 280 10387	RELAY HR-CR7-DC12V	*LY000190R
▲ RY62		4822 280 10386	RELAY OSA-SS-212DM3	*LY000180R
SP51		4822 265 11648	TERMINAL SPEAKER	*YT001710R
SP52		4822 265 11648	TERMINAL SPEAKER	*YT001710R
SP53		4822 265 11603	TERMINAL SPEAKER	*YT001580R
TH91		4822 116 10106	THERMISTER NTC5D103	*HH000090R
			INPUT CIRCUIT BOARD	
			CAPACITORS	
C104		nsp	CER. 15pF 50V J	nsp
C105		nsp	MYLAR 0.047μF 50V J	nsp
C106		9965 000 00204	STYROLE 470pF	*OF100210R
C111		nsp	CER. 0.022μF 50V Z	nsp
C113		nsp	ELECT 100μF 16V	nsp
C115		nsp	CER. 0.022μF 50V Z	nsp
C116		nsp	CER. 0.022μF 50V Z	nsp
C123		nsp	CER. 0.022μF 50V Z	nsp
C124		nsp	ELECT 4.7μF 50V	nsp
C125		nsp	CER. 0.022μF 50V Z	nsp
C126		nsp	CER. 0.022μF 50V Z	nsp
C127		nsp	ELECT 470μF 10V	nsp
C128		nsp	CER. 1000pF 50V K	nsp
C130		nsp	CER. 0.047μF 50V Z	nsp
C131		nsp	CER. 33pF 50V J	nsp
C132		nsp	CER. 33pF 50V J	nsp
C133		nsp	ELECT 1.0μF 50V	nsp
C134		nsp	ELECT 2.2μF 50V	nsp
C135		nsp	ELECT 1μF 50V	nsp
C136		nsp	CER. KCKR1H331KB	nsp
C137		nsp	CER. 100pF 50V K	nsp
C138		nsp	ELECT 1.0μF 50V	nsp
C140		nsp	ELECT 100μF 16V	nsp
C141		nsp	CER. 0.1μF 50V Z	nsp
C142		nsp	MYLAR 1500pF 50V J	nsp
C143		nsp	ELECT 100μF 16V	nsp
C144		nsp	MYLAR 0.027μF 50V J	nsp
C145		nsp	CER. 0.047μF 50V Z	nsp
C146		nsp	CER. 0.047μF 50V Z	nsp
C147		nsp	ELECT 0.47μF 50V	nsp
C148		nsp	ELECT 1.0μF 50V	nsp
C149		nsp	CER. 100pF 50V K	nsp

(VERS. :VERSION, U:U.S.A., F:JAPAN, K:FAR EAST, **:EUROPE)

POS. NO	VERS. COLOR	PART NO. (FOR PCS)	DESCRIPTION	PART NO. (MJI)
C150		nsp	CER. 100pF 50V K	nsp
C151		nsp	ELECT 100μF 16V	nsp
C152		nsp	CER. 0.022μF 50V Z	nsp
C153		nsp	ELECT 10μF 35V	nsp
C154		nsp	ELECT 10μF 35V	nsp
C155		nsp	ELECT 1.0μF 50V	nsp
C156		nsp	ELECT 0.22μF 50V	nsp
C157		nsp	ELECT 1.0μF 50V	nsp
C158		nsp	ELECT 10μF 35V	nsp
C159		nsp	CER. 180pF 50V K	nsp
C160		nsp	CER. 180pF 50V K	nsp
C161		nsp	CER. 47pF 50V J	nsp
C162		nsp	CER. 47pF 50V J	nsp
C163		nsp	ELECT 10μF 35V	nsp
C164		nsp	ELECT 10μF 35V	nsp
C165		nsp	CER. 0.022μF 50V Z	nsp
C166		nsp	CER. 560pF 50V K	nsp
C167		nsp	ELECT 10μF 35V	nsp
C168		nsp	CER. 0.047μF 50V Z	nsp
C169		nsp	CER. 100pF 50V K	nsp
C170		nsp	CER. 56pF 50V J	nsp
C171		nsp	ELECT 220μF 16V	nsp
C172		nsp	CER. 0.022μF 50V Z	nsp
C173		nsp	CER. 8pF 50V D	nsp
C174		nsp	MYLAR 3900pF 50V J	nsp
C177		nsp	CER. 0.047μF 50V Z	nsp
C178		nsp	CER. 180pF 50V K	nsp
C205		nsp	CER. 100pF 50V K	nsp
C206		nsp	CER. 100pF 50V K	nsp
C207		nsp	CER. 100pF 50V K	nsp
C208		nsp	CER. 100pF 50V K	nsp
C209		nsp	CER. 100pF 50V K	nsp
C210		nsp	CER. 100pF 50V K	nsp
C211		nsp	CER. 100pF 50V K	nsp
C212		nsp	CER. 100pF 50V K	nsp
C213		nsp	CER. 100pF 50V K	nsp
C214		nsp	CER. 100pF 50V K	nsp
C215		nsp	CER. 100pF 50V K	nsp
C216		nsp	CER. 100pF 50V K	nsp
C217		nsp	CER. 100pF 50V K	nsp
C218		nsp	CER. 100pF 50V K	nsp
C219		nsp	CER. 100pF 50V K	nsp
C220		nsp	CER. 100pF 50V K	nsp
C221		nsp	CER. 100pF 50V K	nsp
C222		nsp	CER. 100pF 50V K	nsp
C223		nsp	CER. 100pF 50V K	nsp
C224		nsp	CER. 100pF 50V K	nsp
C239		nsp	CER. 0.022μF 50V Z	nsp
C240		nsp	CER. 0.022μF 50V Z	nsp
C241		nsp	CER. 0.022μF 50V Z	nsp
C242		nsp	CER. 0.022μF 50V Z	nsp
C243		nsp	CER. 1000pF 50V K	nsp
C244		nsp	CER. 1000pF 50V K	nsp
C245		nsp	CER. 0.022μF 50V Z	nsp
C246		nsp	CER. 0.022μF 50V Z	nsp
C247		nsp	CER. 100pF 50V K	nsp
C248		nsp	CER. 100pF 50V K	nsp
C249		nsp	CER. 0.022μF 50V Z	nsp
C250		nsp	CER. 0.022μF 50V Z	nsp
C251		nsp	CER. 470pF 50V K	nsp
C252		nsp	CER. 470pF 50V K	nsp
C253		nsp	ELECT 10μF 35V	nsp
C254		nsp	ELECT 10μF 35V	nsp
C255		nsp	CER. 100pF 50V K	nsp
C261		nsp	ELECT 10μF 35V	nsp
C262		nsp	ELECT 10μF 35V	nsp
C263		nsp	ELECT 10μF 35V	nsp
C264		nsp	ELECT 10μF 35V	nsp

(VERS. :VERSION, U:U.S.A., F:JAPAN, K:FAR EAST, **:EUROPE)

POS. NO	VERS. COLOR	PART NO. (FOR PCS)	DESCRIPTION	PART NO. (MJI)
C265		nsp	ELECT 10µF 35V	nsp
C266		nsp	ELECT 10µF 35V	nsp
C267		nsp	CER. 100pF 50V K	nsp
C268		nsp	CER. 100pF 50V K	nsp
C269		nsp	CER. 100pF 50V K	nsp
C270		nsp	CER. 100pF 50V K	nsp
C271		nsp	CER. 100pF 50V K	nsp
C272		nsp	CER. 100pF 50V K	nsp
C273		nsp	MYLAR 6800pF 50V J	nsp
C274		nsp	MYLAR 6800pF 50V J	nsp
C275		nsp	MYLAR 6800pF 50V J	nsp
C276		nsp	MYLAR 6800pF 50V J	nsp
C277		nsp	MYLAR 6800pF 50V J	nsp
C278		nsp	MYLAR 6800pF 50V J	nsp
C279		nsp	CER. 180pF 50V K	nsp
C280		nsp	CER. 180pF 50V K	nsp
C281		nsp	CER. 180pF 50V K	nsp
C282		nsp	CER. 180pF 50V K	nsp
C283		nsp	CER. 180pF 50V K	nsp
C284		nsp	CER. 180pF 50V K	nsp
C285		nsp	CER. 0.022µF 50V Z	nsp
C286		nsp	CER. 0.022µF 50V Z	nsp
C287		nsp	CER. 0.022µF 50V Z	nsp
C288		nsp	CER. 0.022µF 50V Z	nsp
C289		nsp	CER. 0.022µF 50V Z	nsp
C290		nsp	CER. 0.022µF 50V Z	nsp
C291		nsp	ELECT 10µF 35V	nsp
C292		nsp	ELECT 10µF 35V	nsp
C293		nsp	ELECT 10µF 35V	nsp
C294		nsp	ELECT 10µF 35V	nsp
C295		nsp	ELECT 10µF 35V	nsp
C296		nsp	ELECT 10µF 35V	nsp
C298		nsp	CER. 180pF 50V K	nsp
C299		nsp	CER. 180pF 50V K	nsp
C301		nsp	CER. 470pF 50V K	nsp
C302		nsp	CER. 470pF 50V K	nsp
C303		nsp	CER. 470pF 50V K	nsp
C304		nsp	CER. 470pF 50V K	nsp
C305		nsp	CER. 470pF 50V K	nsp
C306		nsp	CER. 470pF 50V K	nsp
C307		nsp	MYLAR 0.027µF 50V J	nsp
C308		nsp	MYLAR 0.027µF 50V J	nsp
C309		nsp	MYLAR 0.027µF 50V J	nsp
C310		nsp	MYLAR 0.027µF 50V J	nsp
C311		nsp	CER. 0.022µF 50V Z	nsp
C312		nsp	CER. 0.022µF 50V Z	nsp
C313		nsp	CER. 100pF 50V K	nsp
C314		nsp	CER. 100pF 50V K	nsp
C315		nsp	ELECT 47µF 25V	nsp
C316		nsp	ELECT 47µF 25V	nsp
C317		nsp	CER. 0.022µF 50V Z	nsp
C318		nsp	CER. 0.022µF 50V Z	nsp
C319		nsp	ELECT 10µF 35V	nsp
C321		nsp	CER. 100pF 50V K	nsp
C322		nsp	CER. 100pF 50V K	nsp
C323		nsp	CER. 180pF 50V K	nsp
C324		nsp	CER. 180pF 50V K	nsp
C325		nsp	CER. 0.022µF 50V Z	nsp
C326		nsp	CER. 0.022µF 50V Z	nsp
C327		nsp	CER. 0.022µF 50V Z	nsp
C328		nsp	CER. 0.022µF 50V Z	nsp
C329		nsp	MYLAR 0.027µF 50V J	nsp
C330		nsp	MYLAR 0.027µF 50V J	nsp
C331		nsp	ELECT 10µF 35V	nsp
C332		nsp	ELECT 10µF 35V	nsp
C333		nsp	CER. 100pF 50V K	nsp
C334		nsp	CER. 0.022µF 50V Z	nsp
C335		nsp	CER. 0.022µF 50V Z	nsp

(VERS. :VERSION, U:U.S.A., F:JAPAN, K:FAR EAST, **:EUROPE)

POS. NO	VERS. COLOR	PART NO. (FOR PCS)	DESCRIPTION	PART NO. (MJI)
C336		nsp	MYLAR 0.027µF 50V J	nsp
C337		nsp	MYLAR 0.027µF 50V J	nsp
C338		nsp	ELECT 10µF 35V	nsp
C339		nsp	ELECT 10µF 35V	nsp
C340		nsp	CER. 100pF 50V K	nsp
C341		nsp	CER. 0.022µF 50V Z	nsp
C342		nsp	CER. 0.022µF 50V Z	nsp
C343		nsp	MYLAR 0.027µF 50V J	nsp
C344		nsp	MYLAR 0.027µF 50V J	nsp
C345		nsp	ELECT 10µF 35V	nsp
C346		nsp	ELECT 10µF 35V	nsp
C347		nsp	CER. 100pF 50V K	nsp
C348		nsp	CER. 0.022µF 50V Z	nsp
C349		nsp	CER. 0.022µF 50V Z	nsp
C350		nsp	ELECT 10µF 35V	nsp
C351		nsp	CER. 100pF 50V K	nsp
C352		nsp	CER. 100pF 50V K	nsp
C353		nsp	CER. 0.022µF 50V Z	nsp
C354		nsp	CER. 0.022µF 50V Z	nsp
C355		nsp	ELECT 10µF 35V	nsp
C356		nsp	CER. 0.022µF 50V Z	nsp
C357		nsp	CER. 0.022µF 50V Z	nsp
C358		nsp	ELECT 10µF 35V	nsp
C359		nsp	ELECT 10µF 35V	nsp
C360		nsp	CER. 100pF 50V K	nsp
C361		4822 121 43396	METL 0.12µF 63V K	*OF100180R
C362		nsp	CER. 470pF 50V K	nsp
C363		9965 000 00194	METL METALIZED	*OF100200R
C391		nsp	ELECT 10µF 35V	nsp
C392		nsp	ELECT 10µF 35V	nsp
C401		nsp	ELECT 47µF 25V	nsp
C402		nsp	ELECT 47µF 25V	nsp
C403		nsp	CER. 0.022µF 50V Z	nsp
C404		nsp	CER. 0.022µF 50V Z	nsp
C405		nsp	ELECT 10µF 35V	nsp
C406		nsp	ELECT 10µF 16V	nsp
C415		nsp	CER. 18pF 50V J	nsp
C416		nsp	CER. 18pF 50V J	nsp
C417		nsp	ELECT 10µF 35V	nsp
C418		nsp	ELECT 10µF 35V	nsp
C419		nsp	ELECT 10µF 35V	nsp
C420		nsp	CER. 100pF 50V K	nsp
C430		nsp	ELECT 10µF 35V	nsp
C431		nsp	CER. 18pF 50V J	nsp
C440		nsp	ELECT 47µF 25V	nsp
C441		nsp	ELECT 47µF 25V	nsp
C442		nsp	CER. 0.022µF 50V Z	nsp
C443		nsp	CER. 0.022µF 50V Z	nsp
C445		nsp	ELECT 10µF 35V	nsp
C446		nsp	ELECT 10µF 16V	nsp
C449		nsp	CER. 18pF 50V J	nsp
C450		nsp	CER. 18pF 50V J	nsp
C451		nsp	ELECT 10µF 35V	nsp
C452		nsp	ELECT 10µF 35V	nsp
C453		nsp	ELECT 47µF 25V	nsp
C454		nsp	ELECT 47µF 25V	nsp
C455		nsp	CER. 0.022µF 50V Z	nsp
C456		nsp	CER. 0.022µF 50V Z	nsp
C457		nsp	ELECT 10µF 35V	nsp
C458		nsp	ELECT 10µF 16V	nsp
C491		nsp	MYLAR 4700pF 50V J	nsp
C492		nsp	MYLAR 4700pF 50V J	nsp
C493		nsp	MYLAR 4700pF 50V J	nsp
C494		nsp	MYLAR 4700pF 50V J	nsp
C495		nsp	MYLAR 4700pF 50V J	nsp
C496		nsp	MYLAR 4700pF 50V J	nsp
C498		nsp	CER. 180pF 50V K	nsp
C499		nsp	CER. 180pF 50V K	nsp

(VERS. :VERSION, U:U.S.A., F:JAPAN, K:FAR EAST, **:EUROPE)

POS. NO	VERS. COLOR	PART NO. (FOR PCS)	DESCRIPTION	PART NO. (MJI)
C501		nsp	CER. 0.1µF 50V Z	nsp
C502		nsp	CER. 0.1µF 50V Z	nsp
C503		nsp	CER. 0.1µF 50V Z	nsp
C504		nsp	CER. 0.1µF 50V Z	nsp
C505		nsp	CER. 0.1µF 50V Z	nsp
C507		nsp	CER. 0.1µF 50V Z	nsp
C508		nsp	CER. 0.1µF 50V Z	nsp
C510		nsp	CER. 470pF 50V K	nsp
C511		nsp	CER. 470pF 50V K	nsp
C512		nsp	ELECT 1.0µF 50V	nsp
C513		nsp	MYLAR 0.022µF 50V J	nsp
C514		nsp	MYLAR 0.022µF 50V J	nsp
C515		nsp	CER. 27pF 50V J	nsp
C516		nsp	CER. 27pF 50V J	nsp
C517		nsp	CER. 0.1µF 50V Z	nsp
C518		nsp	CER. 0.1µF 50V Z	nsp
C519		nsp	CER. 0.1µF 50V Z	nsp
C520		nsp	ELECT 100µF 16V	nsp
C521		nsp	CER. 0.01µF 50V Z	nsp
C522		nsp	CER. 0.1µF 50V Z	nsp
C523		nsp	ELECT 470µF 10V	nsp
C524		nsp	CER. 0.1µF 50V Z	nsp
C525		nsp	ELECT 100µF 16V	nsp
C526		nsp	CER. 0.1µF 50V Z	nsp
C527		nsp	CER. 22pF 50V J	nsp
C528		nsp	CER. 22pF 50V J	nsp
C529		nsp	ELECT 100µF 16V	nsp
C531		nsp	CER. 0.01µF 50V Z	nsp
C532		nsp	CER. 180pF 50V K	nsp
C533		nsp	CER. 18pF 50V J	nsp
C534		nsp	CER. 180pF 50V K	nsp
C535		nsp	ELECT 10µF 16V	nsp
C536		nsp	CER. 0.1µF 50V Z	nsp
C537		nsp	CER. 0.1µF 50V Z	nsp
C550		nsp	CER. 0.1µF 50V Z	nsp
C555		nsp	ELECT 1.0µF 50V	nsp
C561		nsp	CER. 0.1µF 50V Z	nsp
C571		nsp	CER. 0.01µF 50V Z	nsp
C572		nsp	CER. 0.022µF 50V Z	nsp
CT01		4822 125 11116	TRIM	*CT000110R
			CERAMIC FILTERS	
CF11		4822 242 11039	SFE10.7MS8H-A-T	*FF100230R
CF12		4822 242 11039	SFE10.7MS8H-A-T	*FF100230R
CF22		4822 242 10853	SFZ450F	FF10045290
			DIODES	
D101		4822 130 11681	VARICAP SVC342-L-AA	*HD400160R
D111		4822 130 30621	1N4148	QP13030621
D112		4822 130 30621	1N4148	QP13030621
D113		4822 130 30621	1N4148	QP13030621
D190		4822 130 80317	ZENER 5.1V 1/2W	HD30511000
D501		4822 130 30621	1N4148	QP13030621
D502		4822 130 30621	1N4148	QP13030621
			INTEGRATED CIRCUITS	
IC11		4822 209 15778	LC72131M	*HC104820R
IC12		4822 209 71785	LA1266	HC10222030
IC13		4822 209 73434	LA3401	*HC105050R
IC15		4822 209 90087	KA7812-ABTU	*HC700200R
IC20		9965 000 00195	KIC9164AF	*HC105030R
IC23		9965 000 00196	KIC9163AF	*HC105020R
IC24		5322 209 13406	NJM2068MD-TE1	*HC104840R
IC25		5322 209 13406	NJM2068MD-TE1	*HC104840R
IC27		5322 209 13406	NJM2068MD-TE1	*HC104840R
IC28		5322 209 13406	NJM2068MD-TE1	*HC104840R
IC29		5322 209 13406	NJM2068MD-TE1	*HC104840R
IC30		9965 000 00197	KIC9162AF	*HC105010R
IC31		5322 209 13406	NJM2068MD-TE1	*HC104840R

(VERS. :VERSION, U:U.S.A., F:JAPAN, K:FAR EAST, **:EUROPE)

POS. NO	VERS. COLOR	PART NO. (FOR PCS)	DESCRIPTION	PART NO. (MJI)
IC32		5322 209 13406	NJM2068MD-TE1	*HC104840R
IC33		5322 209 13406	NJM2068MD-TE1	*HC104840R
IC34		5322 209 13406	NJM2068MD-TE1	*HC104840R
IC35		5322 209 13406	NJM2068MD-TE1	*HC104840R
IC36		5322 209 13406	NJM2068MD-TE1	*HC104840R
IC37		5322 209 13406	NJM2068MD-TE1	*HC104840R
IC38		5322 209 13406	NJM2068MD-TE1	*HC104840R
IC40		5322 209 13406	NJM2068MD-TE1	*HC104840R
IC41		5322 209 13406	NJM2068MD-TE1	*HC104840R
IC42		5322 209 13406	NJM2068MD-TE1	*HC104840R
IC43		9965 000 00198	TC9459F	HC1044305F
IC45		9965 000 00198	TC9459F	HC1044305F
IC46		9965 000 00198	TC9459F	HC1044305F
IC51		9965 000 00199	74HCU04AFN	*HC105040R
IC52		4822 209 17157	CS4226	*HC104990R
IC53		9965 000 00200	DSP56009FJ88	*HC104980R
IC54		4822 209 15593	NN514260ATT-60T	HC10082000
IC55		9965 000 00201	TMP87PH47U	*HC105060R
			COILS	
L104		4822 157 11859	COIL AM ANT 2	*LA000090R
L105		4822 157 11484	COIL AM OSC	*LO000060R
L107		4822 157 11873	COIL	*LC107220R
L108		4822 157 11487	COIL MPX	*LS000060R
L109		4822 157 11487	COIL MPX	*LS000060R
L130		nsp	COIL 10µH,K	nsp
L501		nsp	COIL	nsp
L504		nsp	COIL 10µH,K	nsp
L505		nsp	COIL	nsp
L506		nsp	COIL	nsp
L507		nsp	COIL	nsp
L510		nsp	COIL	nsp
L520		9965 000 00221	BEAD CORE	*FN000090R
L521		9965 000 00221	BEAD CORE	*FN000090R
			SWITCH	
S101		4822 276 14107	TACT SW	*SP000880R
			TRANSISTORS	
Q106		9965 000 00202	KTC3194O	*HT300680R
Q111		4822 130 62787	DTA114YS	*HT300480R
Q112		4822 130 62787	DTA114YS	*HT300480R
Q113		4822 130 61187	DTA144TS	BA10009210
Q114		4822 130 63659	DTC143TS	*BA000700R
Q115		4822 130 63659	DTC143TS	*BA000700R
Q116		4822 130 62787	DTA114YS	*HT300480R
Q180		4822 130 42431	2SC1740SR	*HT300630R
Q401		5322 130 60898	KTC2878B	*HT300600R
Q402		5322 130 60898	KTC2878B	*HT300600R
Q404		5322 130 60898	KTC2878B	*HT300600R
Q405		5322 130 60898	KTC2878B	*HT300600R
Q406		5322 130 60898	KTC2878B	*HT300600R
Q407		5322 130 60898	KTC2878B	*HT300600R
Q501		4822 130 61189	DTC114TS	BA20017210
Q502		4822 130 61189	DTC114TS	BA20017210
			RESISTORS	
R101		nsp	100k Ω 1/5W J	nsp
R107		nsp	1k Ω 1/5W J	nsp
R113		nsp	100 Ω 1/5W J	nsp
R116		nsp	470 Ω 1/5W J	nsp
R117		nsp	470 Ω 1/5W J	nsp
R118		nsp	330 Ω 1/5W J	nsp
R119		nsp	3.3k Ω 1/5W J	nsp
R120		nsp	180 Ω 1/5W J	nsp
R121		nsp	3.3k Ω 1/5W J	nsp
R125		nsp	5.6k Ω 1/5W J	nsp
R126		nsp	560 Ω 1/5W J	nsp
R127		nsp	10k Ω 1/5W J	nsp

(VERS. :VERSION, U:U.S.A., F:JAPAN, K:FAR EAST, **:EUROPE)

POS. NO	VERS. COLOR	PART NO. (FOR PCS)	DESCRIPTION	PART NO. (MJI)
R128		nsp	1kΩ 1/5W J	nsp
R129		nsp	10kΩ 1/5W J	nsp
R130		nsp	1kΩ 1/5W J	nsp
R131		nsp	1kΩ 1/5W J	nsp
R132		nsp	1kΩ 1/5W J	nsp
R133		nsp	5.6kΩ 1/5W J	nsp
R134		nsp	1kΩ 1/5W J	nsp
R135		nsp	1kΩ 1/5W J	nsp
R136		nsp	10kΩ 1/5W J	nsp
R137		nsp	75Ω 1/5W J	nsp
R138		nsp	2.7kΩ 1/5W J	nsp
R139		nsp	100kΩ 1/5W J	nsp
R140		nsp	470Ω 1/5W J	nsp
R141		nsp	10kΩ 1/5W J	nsp
R142		nsp	15kΩ 1/5W J	nsp
R143		nsp	22kΩ 1/5W J	nsp
R144		nsp	75Ω 1/5W J	nsp
R145		nsp	33kΩ 1/5W J	nsp
R146		nsp	75Ω 1/5W J	nsp
R147		nsp	3.3kΩ 1/5W J	nsp
R148		nsp	22kΩ 1/5W J	nsp
R149		nsp	220kΩ 1/5W J	nsp
R150		nsp	220kΩ 1/5W J	nsp
R151		nsp	47kΩ 1/5W J	nsp
R152		nsp	330kΩ 1/5W J	nsp
R153		nsp	330kΩ 1/5W J	nsp
R154		nsp	3.3kΩ 1/5W J	nsp
R155		nsp	3.3kΩ 1/5W J	nsp
R156		nsp	4.7kΩ 1/5W J	nsp
R157		nsp	4.7kΩ 1/5W J	nsp
R158		nsp	1.5kΩ 1/5W J	nsp
R159		nsp	1.5kΩ 1/5W J	nsp
R160		nsp	180kΩ 1/5W J	nsp
R161		nsp	180kΩ 1/5W J	nsp
R180		nsp	4.7kΩ 1/5W J	nsp
R181		nsp	75Ω 1/5W J	nsp
R199		nsp	220Ω 1/4W J	nsp
R201		nsp	1kΩ 1/5W J	nsp
R202		nsp	1kΩ 1/5W J	nsp
R205		nsp	47kΩ 1/5W J	nsp
R206		nsp	47kΩ 1/5W J	nsp
R207		nsp	1kΩ 1/5W J	nsp
R208		nsp	1kΩ 1/5W J	nsp
R209		nsp	47kΩ 1/5W J	nsp
R210		nsp	47kΩ 1/5W J	nsp
R211		nsp	1kΩ 1/5W J	nsp
R212		nsp	1kΩ 1/5W J	nsp
R213		nsp	47kΩ 1/5W J	nsp
R214		nsp	47kΩ 1/5W J	nsp
R215		nsp	1kΩ 1/5W J	nsp
R216		nsp	1kΩ 1/5W J	nsp
R219		nsp	1kΩ 1/5W J	nsp
R220		nsp	1kΩ 1/5W J	nsp
R221		nsp	47kΩ 1/5W J	nsp
R222		nsp	47kΩ 1/5W J	nsp
R223		nsp	1kΩ 1/5W J	nsp
R224		nsp	1kΩ 1/5W J	nsp
R225		nsp	1kΩ 1/5W J	nsp
R226		nsp	1kΩ 1/5W J	nsp
R227		nsp	47kΩ 1/5W J	nsp
R228		nsp	47kΩ 1/5W J	nsp
R229		nsp	1kΩ 1/5W J	nsp
R230		nsp	1kΩ 1/5W J	nsp
R231		nsp	180kΩ 1/5W J	nsp
R232		nsp	1kΩ 1/5W J	nsp
R233		nsp	1kΩ 1/5W J	nsp
R234		nsp	1kΩ 1/5W J	nsp
R235		nsp	1kΩ 1/5W J	nsp

(VERS. :VERSION, U:U.S.A., F:JAPAN, K:FAR EAST, **:EUROPE)

POS. NO	VERS. COLOR	PART NO. (FOR PCS)	DESCRIPTION	PART NO. (MJI)
R236		nsp	1kΩ 1/5W J	nsp
R237		nsp	47kΩ 1/5W J	nsp
R238		nsp	47kΩ 1/5W J	nsp
R239		nsp	47kΩ 1/5W J	nsp
R240		nsp	47kΩ 1/5W J	nsp
R241		nsp	180kΩ 1/5W J	nsp
R242		nsp	180kΩ 1/5W J	nsp
R243		nsp	180kΩ 1/5W J	nsp
R259		nsp	100Ω 1/5W J	nsp
R260		nsp	100Ω 1/5W J	nsp
R261		nsp	100Ω 1/5W J	nsp
R262		nsp	100Ω 1/5W J	nsp
R269		nsp	100Ω 1/5W J	nsp
R270		nsp	100Ω 1/5W J	nsp
R271		nsp	4.7kΩ 1/5W J	nsp
R272		nsp	4.7kΩ 1/5W J	nsp
R273		nsp	4.7kΩ 1/5W J	nsp
R274		nsp	4.7kΩ 1/5W J	nsp
R275		nsp	100Ω 1/5W J	nsp
R276		nsp	100Ω 1/5W J	nsp
R277		nsp	1.5kΩ 1/5W J	nsp
R278		nsp	1.5kΩ 1/5W J	nsp
R279		nsp	1.5kΩ 1/5W J	nsp
R280		nsp	1.5kΩ 1/5W J	nsp
R281		nsp	1.5kΩ 1/5W J	nsp
R282		nsp	1.5kΩ 1/5W J	nsp
R283		nsp	100kΩ 1/5W J	nsp
R284		nsp	100kΩ 1/5W J	nsp
R285		nsp	100kΩ 1/5W J	nsp
R286		nsp	100kΩ 1/5W J	nsp
R287		nsp	100kΩ 1/5W J	nsp
R288		nsp	100kΩ 1/5W J	nsp
R289		nsp	10kΩ 1/5W J	nsp
R290		nsp	10kΩ 1/5W J	nsp
R291		nsp	10kΩ 1/5W J	nsp
R292		nsp	10kΩ 1/5W J	nsp
R293		nsp	10kΩ 1/5W J	nsp
R294		nsp	10kΩ 1/5W J	nsp
R295		nsp	1kΩ 1/5W J	nsp
R296		nsp	1kΩ 1/5W J	nsp
R297		nsp	1kΩ 1/5W J	nsp
R298		nsp	1kΩ 1/5W J	nsp
R299		nsp	1kΩ 1/5W J	nsp
R300		nsp	1kΩ 1/5W J	nsp
R301		nsp	4.7kΩ 1/5W J	nsp
R302		nsp	4.7kΩ 1/5W J	nsp
R303		nsp	4.7kΩ 1/5W J	nsp
R304		nsp	4.7kΩ 1/5W J	nsp
R305		nsp	4.7kΩ 1/5W J	nsp
R306		nsp	4.7kΩ 1/5W J	nsp
R307		nsp	100Ω 1/5W J	nsp
R308		nsp	100Ω 1/5W J	nsp
R309		nsp	100Ω 1/5W J	nsp
R310		nsp	100Ω 1/5W J	nsp
R311		nsp	100Ω 1/5W J	nsp
R312		nsp	100Ω 1/5W J	nsp
R313		nsp	180Ω 1/5W J	nsp
R314		nsp	180Ω 1/5W J	nsp
R315		nsp	180Ω 1/5W J	nsp
R316		nsp	1.8kΩ 1/5W J	nsp
R317		nsp	180Ω 1/5W J	nsp
R318		nsp	180Ω 1/5W J	nsp
R319		nsp	100kΩ 1/5W J	nsp
R320		nsp	100kΩ 1/5W J	nsp
R321		nsp	100kΩ 1/5W J	nsp
R322		nsp	100kΩ 1/5W J	nsp
R323		nsp	51kΩ 1/5W J	nsp
R324		nsp	51kΩ 1/5W J	nsp

(VERS. :VERSION, U:U.S.A., F:JAPAN, K:FAR EAST, **:EUROPE)

POS. NO	VERS. COLOR	PART NO. (FOR PCS)	DESCRIPTION	PART NO. (MJI)
R325		nsp	100 Ω 1/5W J	nsp
R326		nsp	100 Ω 1/5W J	nsp
R327		nsp	100 Ω 1/5W J	nsp
R328		nsp	100 Ω 1/5W J	nsp
R329		nsp	18k Ω 1/5W J	nsp
R330		nsp	18k Ω 1/5W J	nsp
R331		nsp	18k Ω 1/5W J	nsp
R332		nsp	18k Ω 1/5W J	nsp
R333		nsp	24k Ω 1/5W J	nsp
R334		nsp	24k Ω 1/5W J	nsp
R335		nsp	100 Ω 1/5W J	nsp
R336		nsp	100 Ω 1/5W J	nsp
R337		nsp	100k Ω 1/5W J	nsp
R339		nsp	33k Ω 1/5W J	nsp
R340		nsp	33k Ω 1/5W J	nsp
R341		nsp	47k Ω 1/5W J	nsp
R342		nsp	47k Ω 1/5W J	nsp
R343		nsp	100 Ω 1/5W J	nsp
R344		nsp	100 Ω 1/5W J	nsp
R345		nsp	100 Ω 1/5W J	nsp
R346		nsp	100 Ω 1/5W J	nsp
R347		nsp	100 Ω 1/5W J	nsp
R348		nsp	51k Ω 1/5W J	nsp
R349		nsp	47k Ω 1/5W J	nsp
R350		nsp	10k Ω 1/5W J	nsp
R351		nsp	47k Ω 1/5W J	nsp
R352		nsp	47k Ω 1/5W J	nsp
R353		nsp	100k Ω 1/5W J	nsp
R354		nsp	100 Ω 1/5W J	nsp
R355		nsp	100 Ω 1/5W J	nsp
R356		nsp	18k Ω 1/5W J	nsp
R357		nsp	100k Ω 1/5W J	nsp
R358		nsp	51k Ω 1/5W J	nsp
R359		nsp	100 Ω 1/5W J	nsp
R360		nsp	47k Ω 1/5W J	nsp
R361		nsp	10k Ω 1/5W J	nsp
R362		nsp	47k Ω 1/5W J	nsp
R363		nsp	47k Ω 1/5W J	nsp
R364		nsp	100 Ω 1/5W J	nsp
R365		nsp	100 Ω 1/5W J	nsp
R366		nsp	18k Ω 1/5W J	nsp
R367		nsp	18k Ω 1/5W J	nsp
R368		nsp	18k Ω 1/5W J	nsp
R369		nsp	18k Ω 1/5W J	nsp
R370		nsp	51k Ω 1/5W J	nsp
R371		nsp	100 Ω 1/5W J	nsp
R372		nsp	100k Ω 1/5W J	nsp
R373		nsp	100 Ω 1/5W J	nsp
R374		nsp	100 Ω 1/5W J	nsp
R375		nsp	47k Ω 1/5W J	nsp
R376		nsp	10k Ω 1/5W J	nsp
R377		nsp	47k Ω 1/5W J	nsp
R378		nsp	47k Ω 1/5W J	nsp
R379		nsp	15k Ω 1/5W J	nsp
R380		nsp	27k Ω 1/5W J	nsp
R381		nsp	100 Ω 1/5W J	nsp
R382		nsp	100 Ω 1/5W J	nsp
R383		nsp	18k Ω 1/5W J	nsp
R384		nsp	5.6k Ω 1/5W J	nsp
R385		nsp	8.2k Ω 1/5W J	nsp
R386		nsp	7.5k Ω 1/5W J	nsp
R387		nsp	7.5k Ω 1/5W J	nsp
R388		nsp	7.5k Ω 1/5W J	nsp
R389		nsp	100k Ω 1/5W J	nsp
R390		nsp	100k Ω 1/5W J	nsp
R391		nsp	15k Ω 1/5W J	nsp
R392		nsp	18k Ω 1/5W J	nsp
R393		nsp	100 Ω 1/5W J	nsp

(VERS. :VERSION, U:U.S.A., F:JAPAN, K:FAR EAST, **:EUROPE)

POS. NO	VERS. COLOR	PART NO. (FOR PCS)	DESCRIPTION	PART NO. (MJI)
R394		nsp	100 Ω 1/5W J	nsp
R395		nsp	47k Ω 1/5W J	nsp
R396		nsp	100 Ω 1/5W J	nsp
R397		nsp	100 Ω 1/5W J	nsp
R401		nsp	100 Ω 1/5W J	nsp
R402		nsp	100 Ω 1/5W J	nsp
R403		nsp	180k Ω 1/5W J	nsp
R404		nsp	180k Ω 1/5W J	nsp
R418		nsp	56k Ω 1/5W J	nsp
R419		nsp	56k Ω 1/5W J	nsp
R422		nsp	180k Ω 1/5W J	nsp
R423		nsp	180k Ω 1/5W J	nsp
R426		nsp	18k Ω 1/5W J	nsp
R427		nsp	18k Ω 1/5W J	nsp
R428		nsp	5.6k Ω 1/5W J	nsp
R429		nsp	5.6k Ω 1/5W J	nsp
R430		nsp	180k Ω 1/5W J	nsp
R431		nsp	8.2k Ω 1/5W J	nsp
R432		nsp	56k Ω 1/5W J	nsp
R433		nsp	5.6k Ω 1/5W J	nsp
R434		nsp	18k Ω 1/5W J	nsp
R435		nsp	5.6k Ω 1/5W J	nsp
R436		nsp	180k Ω 1/5W J	nsp
R437		nsp	8.2k Ω 1/5W J	nsp
R442		nsp	180k Ω 1/5W J	nsp
R443		nsp	5.6k Ω 1/5W J	nsp
R445		nsp	56k Ω 1/5W J	nsp
R446		nsp	56k Ω 1/5W J	nsp
R447		nsp	180k Ω 1/5W J	nsp
R452		nsp	56k Ω 1/5W J	nsp
R453		nsp	56k Ω 1/5W J	nsp
R454		nsp	75k Ω 1/5W J	nsp
R455		nsp	75k Ω 1/5W J	nsp
R456		nsp	180k Ω 1/5W J	nsp
R457		nsp	180k Ω 1/5W J	nsp
R458		nsp	56k Ω 1/5W J	nsp
R459		nsp	56k Ω 1/5W J	nsp
R460		nsp	180k Ω 1/5W J	nsp
R461		nsp	180k Ω 1/5W J	nsp
R462		nsp	5.6k Ω 1/5W J	nsp
R463		nsp	5.6k Ω 1/5W J	nsp
R464		nsp	100 Ω 1/5W J	nsp
R465		nsp	100 Ω 1/5W J	nsp
R466		nsp	100 Ω 1/5W J	nsp
R467		nsp	100 Ω 1/5W J	nsp
R475		nsp	180k Ω 1/5W J	nsp
R477		nsp	75k Ω 1/5W J	nsp
R491		nsp	47k Ω 1/5W J	nsp
R492		nsp	47k Ω 1/5W J	nsp
R493		nsp	47k Ω 1/5W J	nsp
R494		nsp	47k Ω 1/5W J	nsp
R495		nsp	47k Ω 1/5W J	nsp
R496		nsp	47k Ω 1/5W J	nsp
R501		nsp	4.7k Ω 1/5W J	nsp
R502		nsp	75 Ω 1/5W J	nsp
R503		nsp	100k Ω 1/5W J	nsp
R504		nsp	100k Ω 1/5W J	nsp
R505		nsp	100k Ω 1/5W J	nsp
R510		nsp	75 Ω 1/5W J	nsp
R511		nsp	100k Ω 1/5W J	nsp
R512		nsp	22k Ω 1/5W J	nsp
R513		nsp	15k Ω 1/5W J	nsp
R514		nsp	75 Ω 1/5W J	nsp
R520		nsp	15k Ω 1/5W J	nsp
R521		nsp	15k Ω 1/5W J	nsp
R522		nsp	15k Ω 1/5W J	nsp
R523		nsp	330 Ω 1/5W J	nsp
R524		nsp	330 Ω 1/5W J	nsp

(VERS. :VERSION, U:U.S.A., F:JAPAN, K:FAR EAST, **:EUROPE)

POS. NO	VERS. COLOR	PART NO. (FOR PCS)	DESCRIPTION	PART NO. (MJI)
R525		nsp	15k Ω 1/5W J	nsp
R526		nsp	15k Ω 1/5W J	nsp
R527		nsp	15k Ω 1/5W J	nsp
R528		nsp	4.7k Ω 1/5W J	nsp
R551		nsp	4.7k Ω 1/5W J	nsp
R552		nsp	4.7k Ω 1/5W J	nsp
R553		nsp	4.7k Ω 1/5W J	nsp
R554		nsp	4.7k Ω 1/5W J	nsp
R555		nsp	4.7k Ω 1/5W J	nsp
R556		nsp	4.7k Ω 1/5W J	nsp
R560		nsp	2.2 Ω 1/4W J	nsp
R561		nsp	56k Ω 1/5W J	nsp
R562		nsp	56k Ω 1/5W J	nsp
R563		nsp	56k Ω 1/5W J	nsp
R564		nsp	4.7k Ω 1/5W J	nsp
R565		nsp	4.7k Ω 1/5W J	nsp
R566		nsp	4.7k Ω 1/5W J	nsp
R567		nsp	100k Ω 1/5W J	nsp
R568		nsp	100k Ω 1/5W J	nsp
VR11		4822 101 11853	TRIM. EVNDJAA03B24	*RA000790R
VR12		4822 101 11853	TRIM. EVNDJAA03B24	*RA000790R
VR13		4822 101 11854	TRIM.	*RA000800R
			MISCELLANEOUS	
PACK		9965 000 00203	PACK TUNER	*AV000080R
ANT1		4822 265 11601	TERM.ANT SC0210392N	*YT001500R
ET01		nsp	PLATE EARTH	nsp
JK11		9965 000 00205	JACK IN/OUT	*YT001760R
JK12		9965 000 00205	JACK IN/OUT	*YT001760R
JK13		9965 000 00206	TERMINAL IN/OUT	*YT001770R
JK14		9965 000 00206	TERMINAL IN/OUT	*YT001770R
JK15		9965 000 00207	JACK IN/OUT	*YT001750R
JK16		9965 000 00208	JACK BOARD (RF,1P)	*YT001740R
JK17		9965 000 00219	MODULE OPTICAL TORX178A	YJ15000160
T101		4822 157 11861	I.F.T FM	*LA000110R
T102		4822 157 11862	I.F.T AM	*LA000100R
T103		4822 157 11489	I.F.T FM	*LI000070R
X101		9965 000 00222	CRYSTAL	*JX000590R
X102		4822 242 81117	RESONATOR CSB456F11	FQ04563010
X103		4822 242 82242	CER.FILTER BFU450C4N	*FF100190R
X501		9965 000 00223	CRYSTAL	*JX000610R
X502		4822 242 10855	CRYSTAL	*JX000410R
			RF CIRCUIT BOARD	
			CAPACITORS	
C301		nsp	CER. 0.022μF 50V Z	nsp
C302		nsp	CER. 0.022μF 50V Z	nsp
C303		nsp	CER. 0.1μF 50V Z	nsp
C304		nsp	CER. 0.1μF 50V Z	nsp
C305		nsp	ELECT 47μF 25V	nsp
C306		nsp	CER. 1000pF 50V K	nsp
C307		nsp	CER. 0.1μF 50V Z	nsp
C308		nsp	ELECT 47μF 25V	nsp
C309		nsp	CER. 75pF 50V K	nsp
C310		nsp	CER. 0.01μF 50V Z	nsp
C311		nsp	CER. 0.1μF 50V Z	nsp
C312		nsp	CER. 0.1μF 50V Z	nsp
C313		nsp	CER. 0.1μF 50V Z	nsp
C315		nsp	CER. 0.01μF 50V Z	nsp
C316		nsp	CER. 0.1μF 50V Z	nsp
C318		nsp	ELECT 47μF 25V	nsp
C319		nsp	CER. 0.1μF 50V Z	nsp
C320		nsp	CER. 0.1μF 50V Z	nsp
C321		nsp	CER. 0.1μF 50V Z	nsp
C322		nsp	ELECT 47μF 25V	nsp

(VERS. :VERSION, U:U.S.A., F:JAPAN, K:FAR EAST, **:EUROPE)

POS. NO	VERS. COLOR	PART NO. (FOR PCS)	DESCRIPTION	PART NO. (MJI)
C323		nsp	CER. 0.1μF 50V Z	nsp
C324		nsp	ELECT 47μF 25V	nsp
C325		nsp	CER. 0.1μF 50V Z	nsp
C326		nsp	CER. 0.1μF 50V Z	nsp
C327		nsp	CER. 0.1μF 50V Z	nsp
C328		nsp	CER. 0.1μF 50V Z	nsp
C331		nsp	ELECT 47μF 25V	nsp
C332		nsp	CER. 0.01μF 50V Z	nsp
C333		nsp	ELECT 1.0μF 50V	nsp
C334		nsp	CER. 0.022μF 50V Z	nsp
C335		nsp	CER. 0.1μF 50V Z	nsp
C338		nsp	CER. 0.1μF 50V Z	nsp
C339		nsp	CER. 0.1μF 50V Z	nsp
C340		nsp	ELECT 47μF 25V	nsp
C341		nsp	CER. 0.1μF 50V Z	nsp
C342		nsp	CER. 2.2pF 50V K	nsp
C343		nsp	CER. 18pF 50V J	nsp
C345		nsp	ELECT 100μF 16V	nsp
C346		nsp	CER. 0.1μF 50V Z	nsp
C351		nsp	CER. 0.1μF 50V Z	nsp
C352		nsp	ELECT 100μF 16V	nsp
C353		nsp	CER. 0.1μF 50V Z	nsp
C354		nsp	CER. 0.1μF 50V Z	nsp
C361		nsp	ELECT 10μF 35V	nsp
C362		nsp	ELECT 470μF 10V	nsp
C363		nsp	ELECT 10μF 35V	nsp
C364		nsp	ELECT 10μF 35V	nsp
C365		nsp	ELECT 470μF 10V	nsp
C366		nsp	ELECT 10μF 35V	nsp
C367		nsp	ELECT 47μF 25V	nsp
C368		nsp	CER. 0.022μF 50V Z	nsp
C369		nsp	ELECT 10μF 35V	nsp
C370		nsp	CER. 0.022μF 50V Z	nsp
C371		nsp	ELECT 470μF 10V	nsp
C372		nsp	CER. 0.022μF 50V Z	nsp
C373		nsp	CER. 0.022μF 50V Z	nsp
C374		nsp	CER. 0.1μF 50V Z	nsp
			DIODES	
D301		9965 000 00224	VARICAP	*HD400170R
D302		4822 130 30621	1N4148	QP13030621
			INTEGGRATED CIRCUITS	
IC31		9965 000 00226	MC14577CP	*HC105070R
IC32		9965 000 00227	NJM4560L	HC10190090
IC33		4822 209 17162	PM4007A	HC10016660
IC34		9965 000 00225	SRAM GM76C256CLLT	*HC105080R
IC37		4822 209 17452	BA7626	HC10190210
			FUSES	
⚠ F905		4822 252 11379	T4A 250V	*FS000670R
⚠ F907		4822 070 12502	T2.5A 250V	*FS000560R
			COIL	
L301		nsp	COIL	nsp
			TRANSISTORS	
Q301		4822 130 63485	KTC3198Y	*HT300690R
Q302		4822 130 42125	KTD1302T	*HT400400R
Q303		4822 130 42125	KTD1302T	*HT400400R
Q304		4822 130 63485	KTC3198Y	*HT300690R
Q305		4822 130 11621	KTA1271Y	*BA000760R
Q306		4822 130 11621	KTA1271Y	*BA000760R
Q307		4822 130 62503	DTC114YS	*BA000730R
Q309		4822 130 62503	DTC114YS	*BA000730R
Q321		4822 130 11624	KSA733CY	*HT100420R
Q322		4822 130 11624	KSA733CY	*HT100420R
Q323		4822 130 62503	DTC114YS	*BA000730R
Q324		4822 130 62503	DTC114YS	*BA000730R

(VERS. :VERSION, U:U.S.A., F:JAPAN, K:FAR EAST, **:EUROPE)

POS. NO	VERS. COLOR	PART NO. (FOR PCS)	DESCRIPTION	PART NO. (MJI)
Q325		4822 130 62503	DTC114YS	*BA000730R
			RESISTORS	
R301		nsp	1.8k Ω 1/5W J	nsp
R302		nsp	91 Ω 1/5W J	nsp
R303		nsp	560 Ω 1/5W J	nsp
R304		nsp	1k Ω 1/5W J	nsp
R305		nsp	1k Ω 1/5W J	nsp
R306		nsp	4.7k Ω 1/5W J	nsp
R307		nsp	1k Ω 1/5W J	nsp
R308		nsp	10 Ω 1/5W J	nsp
R309		nsp	150 Ω 1/5W J	nsp
R310		nsp	2.2k Ω 1/5W J	nsp
R311		nsp	10 Ω 1/5W J	nsp
R312		nsp	4.7k Ω 1/5W J	nsp
R313		nsp	1k Ω 1/5W J	nsp
R314		nsp	1k Ω 1/5W J	nsp
R315		nsp	10k Ω 1/5W J	nsp
R316		nsp	1k Ω 1/5W J	nsp
R317		nsp	1k Ω 1/5W J	nsp
R318		nsp	1k Ω 1/5W J	nsp
R319		nsp	10k Ω 1/5W J	nsp
R320		nsp	10k Ω 1/5W J	nsp
R321		nsp	4.7k Ω 1/5W J	nsp
R322		nsp	1k Ω 1/5W J	nsp
R323		nsp	47k Ω 1/5W J	nsp
R324		nsp	120 Ω 1/5W J	nsp
R325		nsp	47k Ω 1/5W J	nsp
R326		nsp	68k Ω 1/5W J	nsp
R327		nsp	10k Ω 1/5W J	nsp
R328		nsp	27k Ω 1/5W J	nsp
R329		nsp	100k Ω 1/5W J	nsp
R330		nsp	10 Ω 1/5W J	nsp
R331		nsp	8.2k Ω 1/5W J	nsp
R332		nsp	10 Ω 1/5W J	nsp
R333		nsp	10k Ω 1/5W J	nsp
R334		nsp	3.9k Ω 1/5W J	nsp
R335		nsp	1k Ω 1/5W J	nsp
R336		nsp	3.3k Ω 1/5W J	nsp
R337		nsp	33k Ω 1/5W J	nsp
R338		nsp	47k Ω 1/5W J	nsp
R339		nsp	47k Ω 1/5W J	nsp
R340		nsp	1k Ω 1/5W J	nsp
R341		nsp	1k Ω 1/5W J	nsp
R342		nsp	10k Ω 1/5W J	nsp
R343		nsp	10k Ω 1/5W J	nsp
R345		nsp	10k Ω 1/5W J	nsp
R346		nsp	10k Ω 1/5W J	nsp
R347		nsp	10k Ω 1/5W J	nsp
R348		nsp	10k Ω 1/5W J	nsp
R350		nsp	10k Ω 1/5W J	nsp
R351		nsp	100k Ω 1/5W J	nsp
R354		nsp	100 Ω 1/5W J	nsp
R355		nsp	47 Ω 1/5W J	nsp
R356		nsp	10k Ω 1/5W J	nsp
R357		nsp	10k Ω 1/5W J	nsp
R358		nsp	10k Ω 1/5W J	nsp
R359		nsp	10k Ω 1/5W J	nsp
R360		nsp	10k Ω 1/5W J	nsp
R361		nsp	10k Ω 1/5W J	nsp
R362		nsp	10k Ω 1/5W J	nsp
R363		nsp	10k Ω 1/5W J	nsp
R364		nsp	10k Ω 1/5W J	nsp
R365		nsp	1k Ω 1/5W J	nsp
R366		nsp	10k Ω 1/5W J	nsp
R367		nsp	10k Ω 1/5W J	nsp
R368		nsp	10k Ω 1/5W J	nsp
R369		nsp	4.7k Ω 1/5W J	nsp

(VERS. :VERSION, U:U.S.A., F:JAPAN, K:FAR EAST, **:EUROPE)

POS. NO	VERS. COLOR	PART NO. (FOR PCS)	DESCRIPTION	PART NO. (MJI)
R370		nsp	10k Ω 1/5W J	nsp
R375		nsp	75 Ω 1/5W J	nsp
R376		nsp	100k Ω 1/5W J	nsp
R377		nsp	75 Ω 1/5W J	nsp
R378		nsp	75 Ω 1/5W J	nsp
R379		nsp	75 Ω 1/5W J	nsp
R380		nsp	100k Ω 1/5W J	nsp
R381		nsp	75 Ω 1/5W J	nsp
R382		nsp	100 Ω 1/5W J	nsp
R383		nsp	100 Ω 1/5W J	nsp
R384		nsp	100 Ω 1/5W J	nsp
R385		nsp	100 Ω 1/5W J	nsp
R386		nsp	75 Ω 1/5W J	nsp
R387		nsp	100 Ω 1/5W J	nsp
R388		nsp	10k Ω 1/5W J	nsp
R389		nsp	100 Ω 1/5W J	nsp
R390		nsp	10k Ω 1/5W J	nsp
R391		nsp	100 Ω 1/5W J	nsp
R392		nsp	10k Ω 1/5W J	nsp
R393		nsp	75 Ω 1/5W J	nsp
			MISCELLANEOUS	
JK31		9965 000 00208	JACK BOARD (RF,1P)	*YT001740R
JK32		4822 265 11646	JACK VCR	*YT001730R
JK33		4822 265 11646	JACK VCR	*YT001730R
X301		9965 000 00228	CRYSTAL	*JX000600R
Z301		4822 130 11611	FILTER BPF SBP4930	*FF100250R